ROTARY LAWN MOWER - MODEL NUMBER **PO500N22SX** (MFG. ID. NUMBER 96112005400)

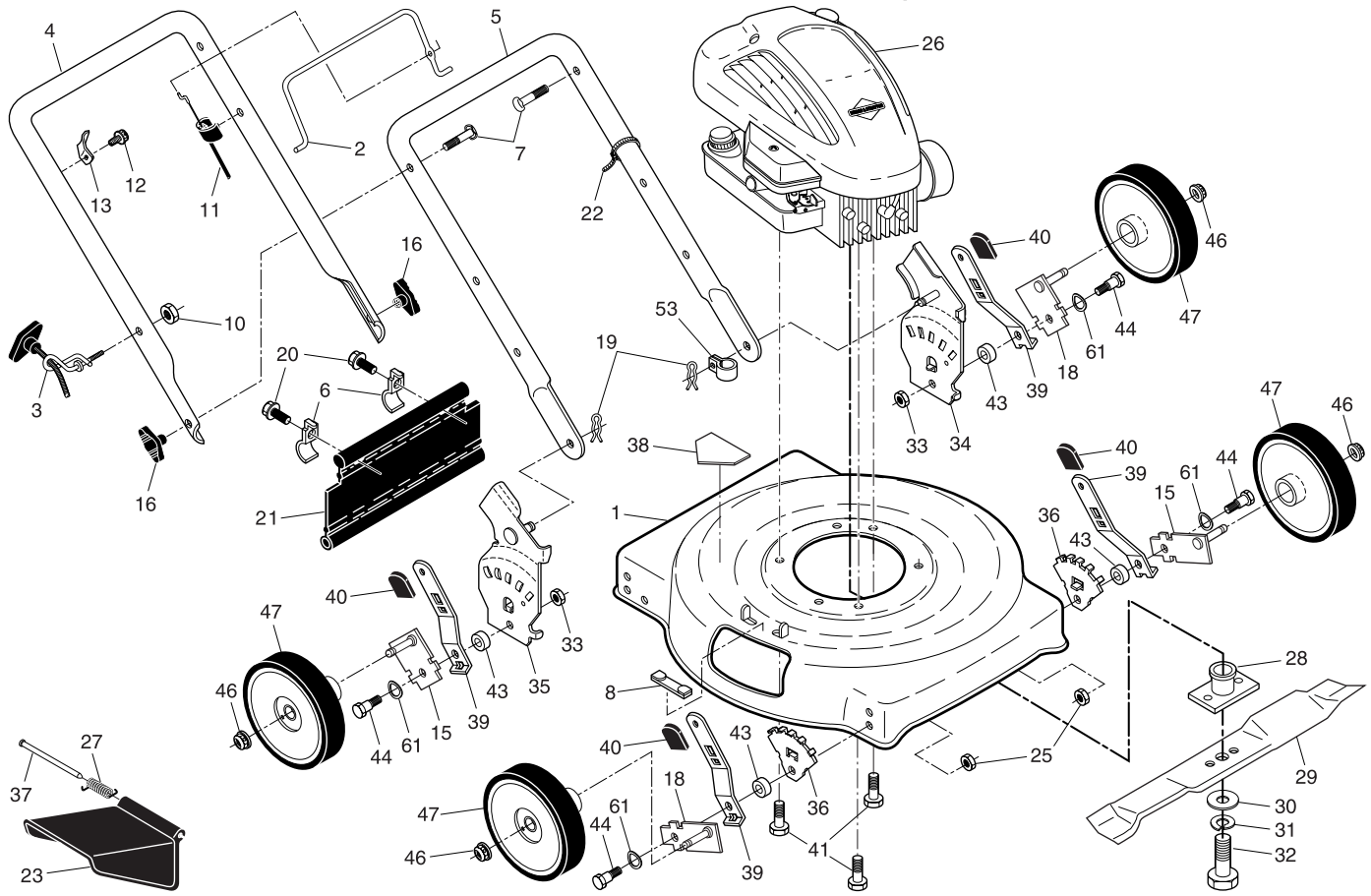

ROTARY LAWN MOWER - MODEL NUMBER **PO500N22SX** (MFG. ID. NUMBER 96112005400)

KEY NO.	PART NO.	DESCRIPTION
1	403018	Kit, Housing (Includes Key Number 38)
2	194177X428	Control Bar
3	194788	Rope Guide
4	194179X479	Upper Handle
5	169708X479	Lower Handle
6	192301X004	Shoulder Bolt 5/16-18 x 1/2
7	191574	Handle Bolt 5/16-18
8	161622	Clip, Closeout
10	132004	Locknut, Hex 1/4-20
11	183281	Engine Zone Control Cable
12	750634	Screw, Hex Head, Threaded, Rolled #10-24 x 1/2
13	86899X004	Up-Stop Bracket
15	401174X004	Axle Arm Assembly, Left Front & Right Rear
16	189713X428	Handle Knob
18	401175X004	Axle Arm Assembly, Right Front & Left Rear
19	51793	Hairpin Cotter
20	750097	Screw, Tapping, Hex Washer Head #10-24
21	188987	Rear Deflector
22	66426	Wire Tie
23	160831	Discharge Guard
25	166785	Nut, Hex, Flangelock 5/16-18
26	- - -	Engine, Briggs & Stratton, Model Number 10T502

KEY NO.	PART NO.	DESCRIPTION
27	408585	Torsion Spring
28	193825	Blade Adapter
29	406713	22" Blade
30	851074	Hardened Washer
31	850263	Helical Lockwasher 3/8
32	851084	Screw, Hex Head, Grade 8, 3/8-24 x 1-3/8
33	73930500	Nut, Hex, Flangelock 5/16-18
34	400781X479	Wheel Bracket Support (Left)
35	400782X479	Wheel Bracket Support (Right)
36	407494X005	Wheel Bracket Adjuster
37	160833	Hinge Rod
38	404763	Danger Decal
39	401621X004	Selector Spring
40	87877	Selector Knob
41	150406	Screw, Hex Head, Threaded, Rolled 3/8-16 x 1
43	401629	Spacer
44	401638	Shoulder Bolt 5/16-18 x .33
45	193931X427	Wheel & Tire Assembly, Rear
46	83923	Nut, Hex, Flangelock 3/8-16
47	193931X427	Wheel & Tire Assembly, Front
53	197991	Clip, Cable
61	401630	Washer, Curved, Cylindrical
- -	404764	Warning Decal (not shown)
- -	193732	Operator's Manual, English
- -	193734	Operator's Manual, French
- -	411482	Replacement Parts Manual

NOTE: All component dimensions given in U.S. inches. 1 inch = 25.4 mm.

IMPORTANT: Use only Original Equipment Manufacturer (O.E.M.) replacement parts. Failure to do so could be hazardous, damage your lawn mower and void your warranty.