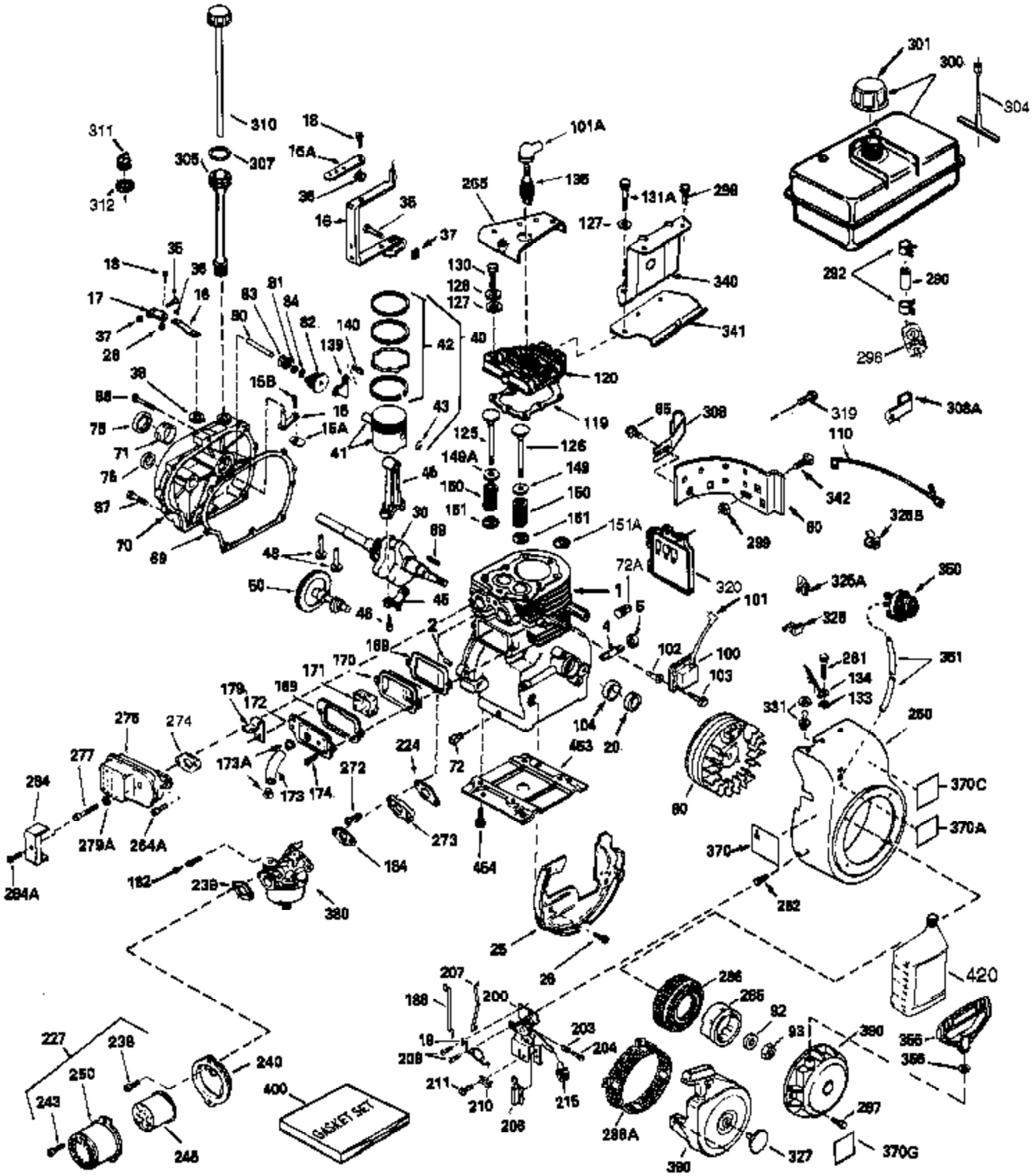
GASKET SET

Ref #	Part Number	Qty	Description
1	34919B	1	Cylinder (Incl. 2, 20 & 72)
2	27652	2	Dowel Pin
15	30699C	1	Governor Rod (Incl. 15A & 15B)
15A	30700	1	Governor Yoke
15B	650494	1	Screw, 6-40 x 5/16"
16	33454	1	Governor Lever
17	29916	1	Governor Lever Clamp
18	650548	1	Screw, 8-32 x 5/16"
19	34663	1	Speed Control Spring
20	32630	1	Oil Seal
25	35326	1	Blower Housing Baffle
26	650561	2	Screw, 1/4-20 x 5/8"
28	30322	1	Lock Nut, 8-32
30	35562	1	Crankshaft
35	29826	1	Screw, 10-32 x 3/4"
36	29918	1	Lock Washer
37	29216	1	Lock Nut, 10-32
38	29642	1	Retaining Ring
40	34531	1	Piston, Pin & Ring Set (Std.)
40	34532	1	Piston, Pin & Ring Set (.010" OS)
40	34533	1	Piston, Pin & Ring Set (.020" OS)
41	33312B	1	Piston & Pin Ass'y. (Std.) (Incl. 43)
41	33313B	1	Piston & Pin Ass'y. (.010" OS) (Incl. 43)
41	33314B	1	Piston & Pin Ass'y. (.020" OS) (Incl. 43)
42	34854	1	Ring Set (Std.)
42	34855	1	Ring Set (.010" OS)
42	34856	1	Ring Set (.020" OS)
43	27888	2	Piston Pin Retaining Ring
45	31380C	1	Connecting Rod Ass'y. (Incl. 46)
46	650662C	2	Connecting Rod Bolt
48	34034	2	Valve Lifter
50	32115	1	Camshaft (MCR)
60	30622A	1	Blower Housing Extension
65	650128	1	Screw, 10-24 x 1/2"
69	30684	1	* Cylinder Cover Gasket
70	31303C	1	Cylinder Cover (Incl. 71, 75 & 80)
71	31546	1	Crankshaft Bushing
72	27642	2	Oil Drain Plug
75	28427	1	Oil Seal
80	31845	1	Governor Shaft
81	30590A	1	Washer
82	30591	1	Governor Gear Ass'y. (Incl. 81)
83	30588A	1	Governor Spool
84	29193	1	Retaining Ring
86	650488	7	Screw, 1/4-20 x 1-1/4"
87	650493	1	Screw, 1/4-20 x 1-3/4"
89	32589	1	Flywheel Key
90	611085	1	Flywheel
92	650815	1	Belleville Washer
93	650871	1	Flywheel Nut
100	34443A	1	Solid State Ignition
101	610118	1	Spark Plug Cover
102	650872	2	Solid State Mounting Stud
103	650814	2	Screw, Torx T-15, 10-24 x 1"
110	35253	1	Ground Wire
119	28938B	1	Cylinder Head Gasket
120	30938A	1	Cylinder Head (Incl. 3 of 130)
125	27878A	1	Exhaust Valve (Std.) (Incl. 151)

Ref #	Part Number	Qty	Description
125	27880A	1	Exhaust Valve (1/32" OS) (Incl. 151)
126	32783	1	Intake Valve (Std.) (Incl. 151)
126	32784	1	Intake Valve (1/32" OS) (Incl. 151)
127	650691	4	Washer
128	650690	3	Belleville Washer
130	650697A	8	Screw, 5/16-18 x 2-1/2"
135	35395	1	Resistor Spark Plug (RJ17LM)
139	31843A	1	Governor Gear Bracket
140	650836	2	Screw, 10-24 x 1/2"
149	27882	2	Valve Spring Cap
150	27881	2	Valve Spring
151	32581	2	Valve Spring Keeper
169	27896A	2	* Breather Gasket
170	28423	1	Breather Body
171	28424	1	Breather Element
172	28425	1	Valve Cover
173	35350	1	Breather Tube
174	650128	2	Screw, 10-24 x 1/2"
182	650372	2	Screw, 1/4-20 x 27/32"
184	31688A	1	* Carburetor To Intake Pipe Gasket
186	34661	1	Governor Link
200	34677	1	Control Bracket (Incl. 19, 203 & 204)
203	31342	1	Compression Spring
204	650549	1	Screw, 5-40 x 7/16"
206	610973	1	Terminal
207	34662	1	Throttle Link
209	650821	2	Screw, 10-32 x 1/2"
215	35440	1	Control Knob
224	27915A	1	* Intake Pipe Gasket
260	35260	1	Blower Housing
262	29747B	2	Screw, Torx T-40, 5/16-24 x 21/32"
265	30939A	1	Cylinder Head Cover
269	27930	1	* Exhaust Manifold Gasket
272	30196	2	Screw, 5/16-18 x 3/4"
273	34712	1	Carburetor Flange
275	32401	1	Muffler
277	650694A	1	Screw, 5/16-18 x 2"
277A	30196	1	Screw, 5/16-18 x 3/4"
279B	26073	1	Washer
285	32125	1	Starter Cup
286	35354	1	Starter Screen
287	29716	4	Screw, 1/4-28 x 7/16"
290	29774	1	Fuel Line (1.56")
291	30962	1	Fuel Line
292	26460	4	Fuel Line Clamp
298	650665	2	Screw, 1/4-15 x 3/4"
299	650764	1	"U" Type Nut
300	34186A	1	Fuel Tank (Incl. 292 & 301)
301	35355	1	Fuel Cap
305	35554	1	Oil Fill Tube
307	35499	1	"O" Ring
308	35540	1	Fill Tube Clip
310	35555	1	Dipstick
325	29443	1	Wire Clip
327	35161	1	Starter Plug
334	650257	2	Screw,8-32 x 5/16"
340	34159	1	Fuel Tank Bracket
341	34158	1	Fuel Tank Bracket

Ref #	Part Number	Qty	Description
342	650561	1	Screw, 1/4-20 x 5/8"
350	570682	1	Primer Ass'y.
351	32180C	1	Primer Line
355	590574	1	Starter Handle
356	650168	1	Washer
380	632379	1	Carburetor (Incl. 184)
390	590604	1	Rewind Starter
400	33235	1	* Gasket Set (Incl. items marked PK i n notes) Incl. part #'s 27272 (2), 27896 (2), 27913 (1), 27915A (2), 27930 (1), 28938B (1), 29673 (1), 30684 (1), 31688 (1), 33355 (1)
420	730225	1	SAE 30 4-Cycle Engine Oil (Quart)
453	29538	1	Engine Mounting Base
454	650542	4	Screw, 5/16-18 x 3/4"

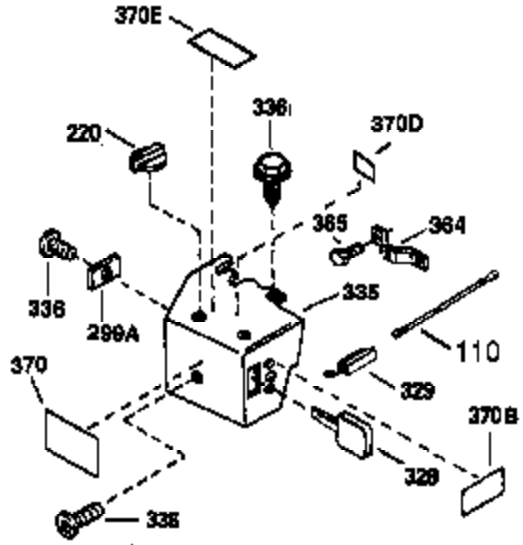

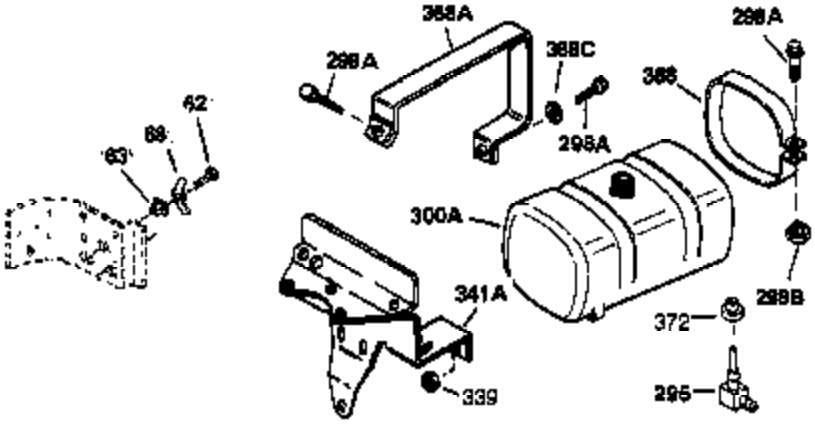

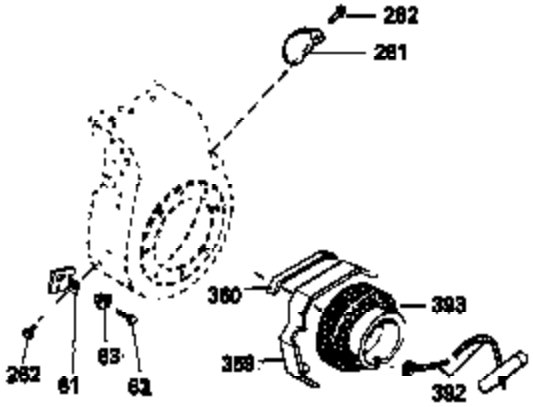

OPTIONAL 110-120 VOLT STARTER MOTOR KIT

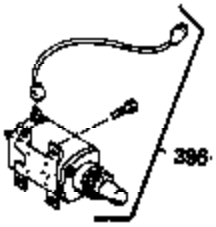

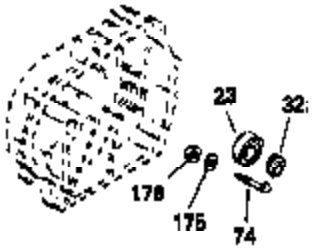

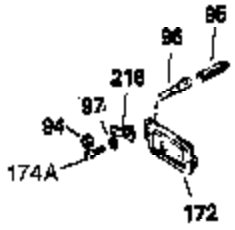

OPTIONAL SPARK ARREST MUFFLER

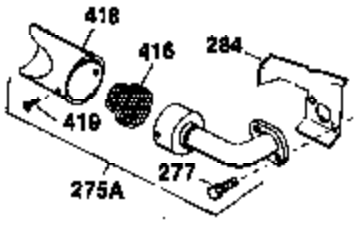

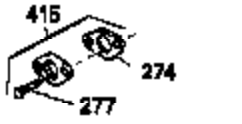

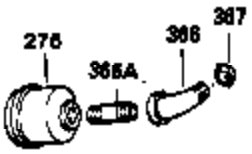

Ref #	Part Number	Qty	Description
61	34126	1	Grommet Mounting Bracket
62	650760	1	Screw, 8-32 x 3/8"
63	28545	1	Grommet
110	35253	1	Ground Wire
172	28425	1	Valve Cover
220	35439	1	Choke Knob
262	29747B	2	Screw, Torx T-40, 5/16-24 x 21/32"
269	27930	1	* Exhaust Manifold Gasket
275	32401	1	Muffler
277	650694A	1	Screw, 5/16-18 x 2"
277A	30196	1	Screw, 5/16-18 x 3/4"
279B	26073	1	Washer
281	33013	1	Starter Bubble Cover
282	650760	1	Screw, 8-32 x 3/8"
291	30962	1	Fuel Line
295	32961	1	Fuel Shut-Off Valve
334	650257	2	Screw,8-32 x 5/16"
335	35060	1	Carburetor Cover
336	650765	1	Screw, 10-32 x 1/2"
338	650760	1	Screw, 8-32 x 3/8"
359	34127	1	Starter Guard
360	32576	1	Snow Guard
364	32398	1	Choke Bracket
365	28820	2	Screw, 10-32 x 1/2"

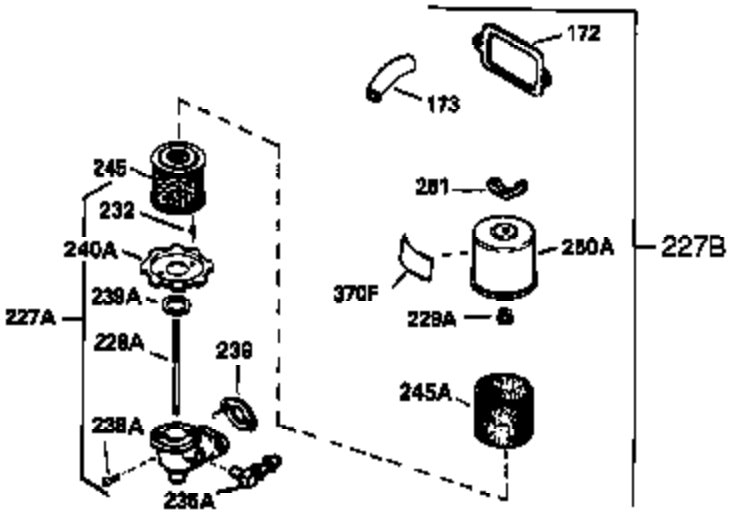

ADD-ON ALTERNATOR
AC LIGHTING OR DC CHARGING

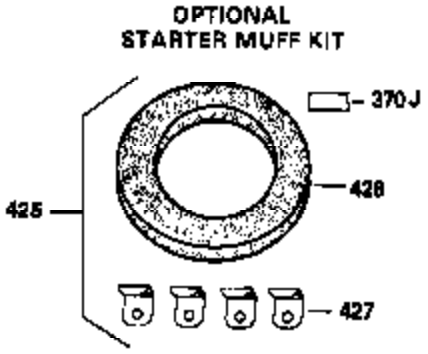

OPTIONAL
STARTER MUFF KIT

730571
Can be used on H50-60 with stamped steel starter.

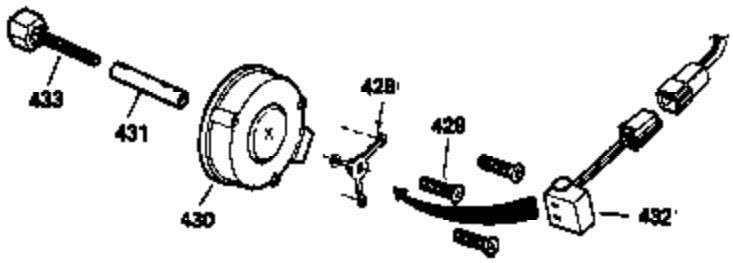

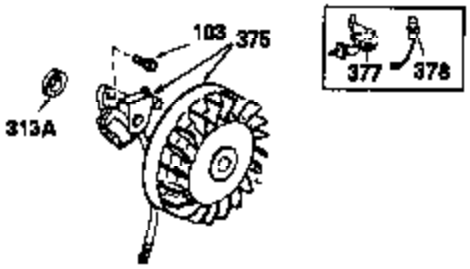

STANDARD POINT
IGNITION

SOLID STATE

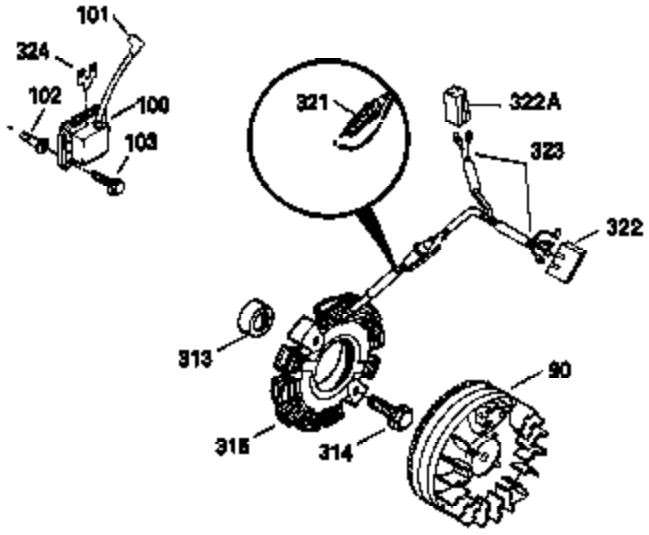

Ref #	Part Number	Qty	Description
90	611085	1	Flywheel
100	34443A	1	Solid State Ignition
101	610118	1	Spark Plug Cover
102	650872	2	Solid State Mounting Stud
103	650814	2	Screw, Torx T-15, 10-24 x 1"
172	28425	1	Valve Cover
173	35350	1	Breather Tube
269	27930	1	* Exhaust Manifold Gasket
277A	30196	1	Screw, 5/16-18 x 3/4"
279B	26073	1	Washer
291	30962	1	Fuel Line
334	650257	2	Screw,8-32 x 5/16"