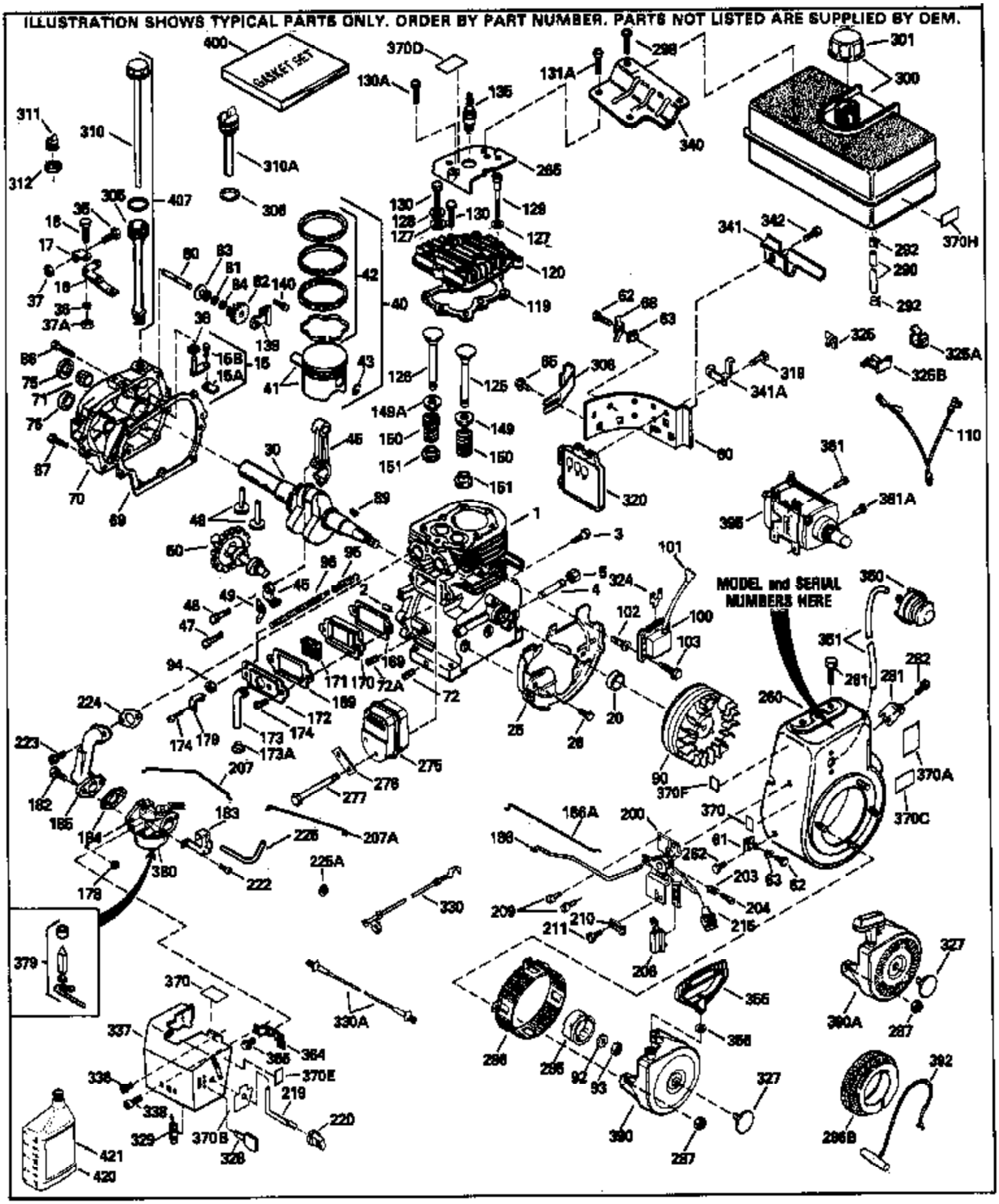
ILLUSTRATION SHOWS TYPICAL PARTS ONLY. ORDER BY PART NUMBER. PARTS NOT LISTED ARE SUPPLIED BY OEM.
GASKET SET
MODEL and SERIAL NUMBERS HERE

Ref #	Part Number	Qty	Description
1	35385		Cylinder (Incl. 2,20,72,72A) (3-1/8" Bore)
2	27652		Pin, Dowel
15	30699C		Rod Assy., Governor (Incl. 15A & 15B)
15B	650494		Screw, 6-40 x 5/16"
15A	30700		Yoke, Governor
16	33454		Governor Lever Assy.
17	29916		Clamp, Governor lever
18	650548		Screw, 8-32 x 5/16"
20	35319		Seal, Oil
25	36460		Baffle, Blower housing
26	650561		Screw, 1/4-20 x 5/8"
30	35420A		Crankshaft
35	29826		Screw, 10-32 x 3/4"
36	29918		Lockwasher, # 8 E.T.
37	29216		Nut & Lockwasher, 10-32
37A	30322		Locknut, 8-32
38	29642		Ring, Retaining
40	34552		Piston, Pin & Ring Set (Std.) (3-1/8" Bore)
40	34553		Piston, Pin & Ring Set (.010" OS)
40	34554		Piston, Pin & Ring Set (.020" OS)
41	34329A		Piston & Pin Ass'y. (3-1/8")(Std.)(In cl. 43)
41	34330A		Piston & Pin Ass'y. (.010" OS) (Incl. 43)
41	34331A		Piston & Pin Ass'y. (.020" OS) (Incl. 43)
42	34332		Ring Set (Std.) (3-1/8" Bore)
42	34333		Ring Set (.010" OS)
42	34334		Ring Set (.020" OS)
43	27888		Ring, Piston pin retaining
45	35373A		Rod Assy., Connecting (Incl. 49)
46	650908		Bolt, Connecting rod
47	650882		Bolt, Connecting rod
48	34034		Lifter, Valve
49	35374		Dipper, Oil
50	35375		Camshaft (MCR)
60	33273A		Extension, Blower housing
65	650128		Screw, 10-24 x 1/2"
69	35262		* Gasket, Cylinder cover
70	33626B		Cyl.Cover(Incl.71,74,75,80,175,176,31 1,312)
71	35377		Bushing, Crankshaft
72	27642		Plug, Oil drain
75	33625		Seal, Oil
80	31845		Shaft, Mechanical governor
81	30590A		Washer, Flat
82	35378		Gear Assy., Governor (Incl. 81)
83	30588A		Spool, Governor
84	29193		Ring, Retaining
86	650833		Screw, 1/4-20 x 1-3/16"
87	650832		Screw, 1/4-20 x 1-11/16"
89	32589		Key, Flywheel
90	611094		Flywheel (7 amp, w/ring gear)
92	650880		Washer, Belleville
93	650881		Hex Nut, 5/8-18
100	35135		Lamination Assy., Solid State
102	650872		Stud, Lamination mounting
103	650814		Screw, Torx T-15, 10-24 x 1"
110	35187		Ground Wire
119	34041A		* Gasket, Head
120	34030A		Head, Cylinder
125	27878A		Exhaust Valve (Std.) (Incl. 151)

Ref #	Part Number	Qty	Description
125	27880A		Exhaust Valve (1/32" OS) (Incl. 151)
126	34035		Intake Valve (Std.) (Incl. 151)
126	34036		Intake Valve (1/32" OS) (Incl. 151)
127	650691		Washer (Use as req., but not w/6021A screw)
128	650690		Washer, Belleville
129	650727		Screw, 5/16-18 x 1-3/4" (Use as requi red)
130	650694A		Screw, 5/16-18 x 2" (Use as required)
130A	6021A		Screw, 5/16-18 x 1-1/2" (Use as req.,but not w/650691 washer)
131A	650713		Screw, 5/16-18 x 5/8" (Use as require d)
135	33636		Resistor Spark Plug (RJ-17LM)
139	33369		Bracket, Governor gear
140	650836		Screw, 10-24 x 1/2"
149A	27882		Cap, Upper valve spring
149A	35862		Seal Assy., Intake valve
149	27882		Cap, Upper valve spring
150	27881		Spring, Valve
151	32581		Cap, Lower valve spring
169	27896A		* Gasket, Breather cover
170	28423		Body, Breather
171	28424		Element, Breather
172	28425		Cover, Valve spring
173	35350		Tube, Breather
174	650128		Screw, 10-24 x 1/2"
178	29752		Nut & Lockwasher, 1/4-28
182	30088A		Screw, 1/4-28 x 1"
184	33263		* Gasket, Carburetor
185	34707		Pipe, Intake
186	34661		Link, Governor
203	31342		Spring, Compression
204	650549		Screw, 5-40 x 7/16"
206	610973		Terminal Assy. (Use as required)
207	33878		Link, Governor-to-throttle
209	650821		Screw, 10-32 x 1/2"
211	28820		Screw, 10-32 x 1/2"
215	32410		Knob, Control
223	650378		Screw, Torx T-30, 5/16-18 x 1-1/8"
224	27915A		* Gasket, Intake pipe
242	33267		Bracket, Air cleaner
260	33375D		Blower Housing (For electric starter)
261	650788		Screw, 5/16-18 x 3/4"
262	29747B		Screw, 5/16-24 x 21/32"
265	33272B		Cover, Cylinder head
275	33280A		Muffler
276	35740		Plate, Muffler locking
277	650729		Screw, 5/16-18 x 3-3/16"
285	35985		Cup, Starter
286	35446		Screen, Starter (Stationary)
287	29752		Nut & Lockwasher, 1/4-28
290	30705		Fuel Line (Braided 16") (41 cm)
290	30962		Fuel Line (Braided 32") (81 cm)
292	26460		Clamp, Fuel line
305	35554		Tube, Oil fill
306	35499		"O" Ring
308	35540		Clip, Fill tube
310	36205		Dipstick
319	650874		Screw, 10-32 x 15/32"

Ref #	Part Number	Qty	Description
320	611098		Regulator Assy. (7 amp DC) (External Ign.)
324	33177		Terminal
325	34246		Clip, Ground wire (Use as required)
325B	29443		Clip, Fuel line (Use as required)
327	35392		Plug, Starter
329	610973		Terminal Assy.
330	34069		Wire Harness (6-3/4") (7 Amp)
342	30063		Screw, Torx T-30, 1/4-20 x 1/2"
370B	34387		Decal, Instruction Can be used on HM80 with stamped steel recoil starter.
370A	34686		Decal, Name
370	34346		Decal, Instruction
370	35274		Decal, Instruction
370F	35344		Decal, Throttle
370J	34870		Decal, Instruction Can be used on HM80 with diecast starter.
379	631725		Inlet Needle, Seat & Clip Assy.
380	632397		Carburetor (Incl. 184) (Refer to Division 5, Section A, page A3-10 for breakdown or Fiche 18A-2, Grid F-3)
390A	590671		Rewind Starter (Refer to Division 5, Section C, page 37 for breakdown or Fiche 18A-2, Grid G-2)
394	35791		Repair Kit, Fuel pump
400	33279G		Gasket Set (Incl. items marked*)
407	35836		Fill Tube & Dipstick Assy. (Incl. 306 & 308)
420	730225		SAE 30, 4-Cycle Engine Oil (Quart)
421	730226		SAE 5W30, 4-Cycle Engine Oil (Quart)

ILLUSTRATION SHOWS TYPICAL PARTS ONLY. ORDER BY PART NUMBER. PARTS NOT LISTED ARE SUPPLIED BY OEM.

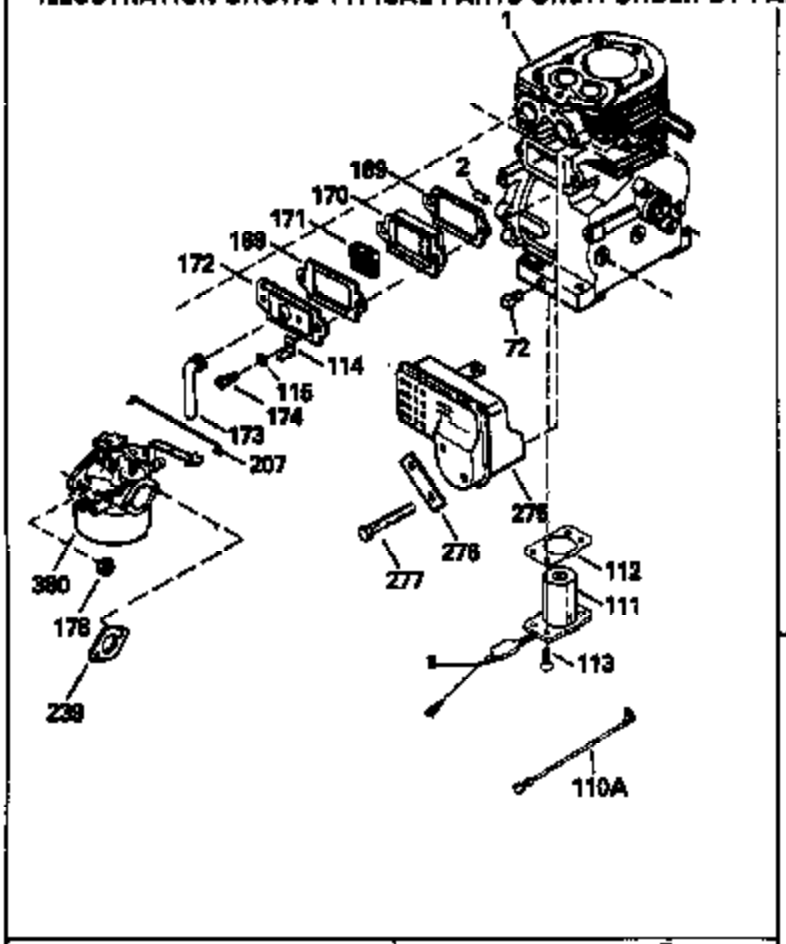

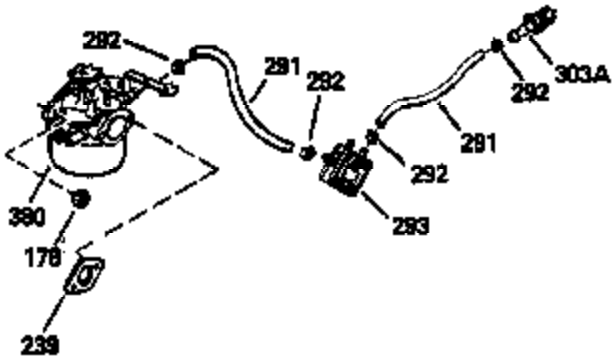

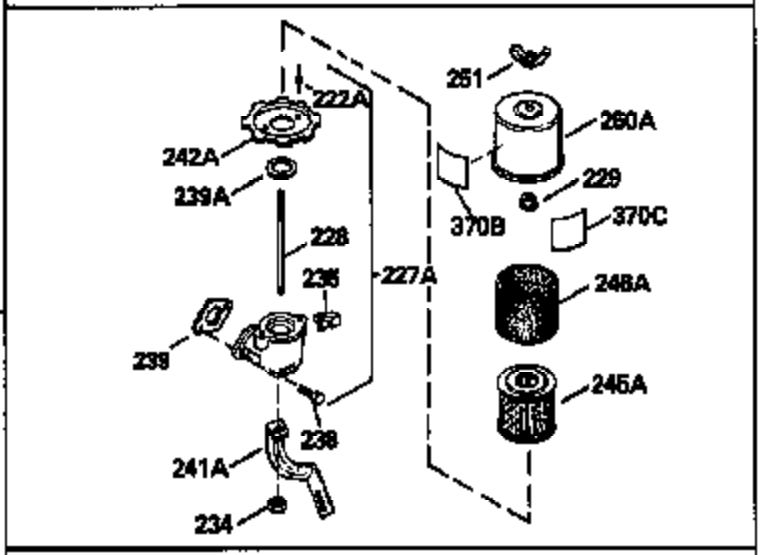

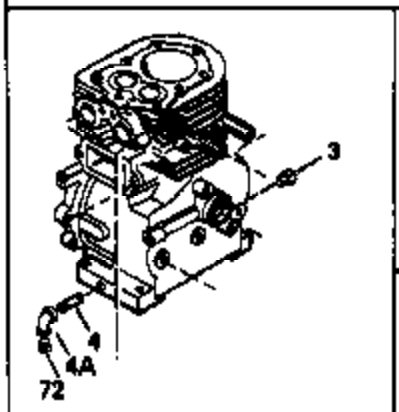

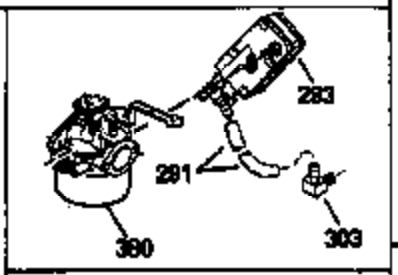

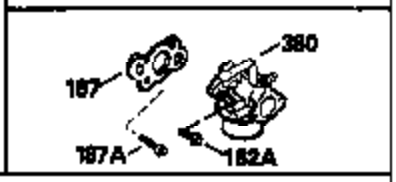

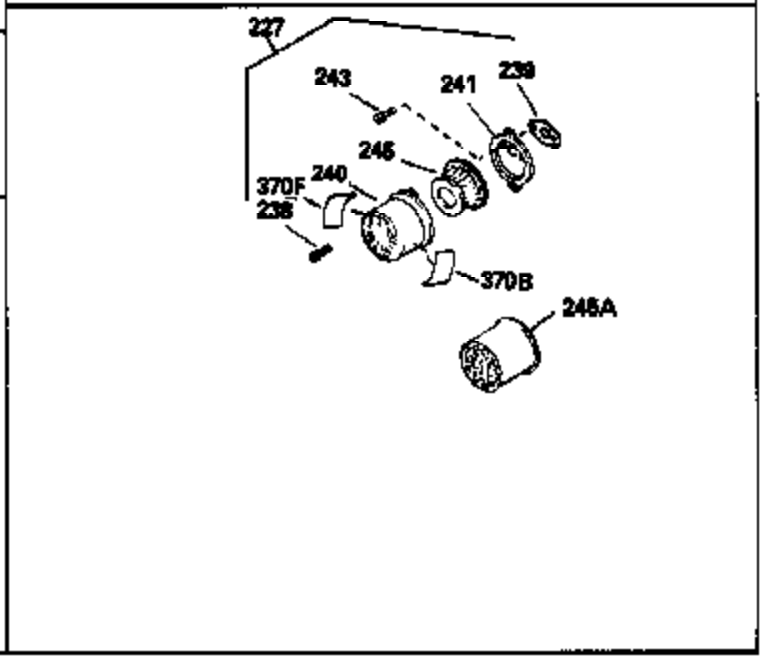

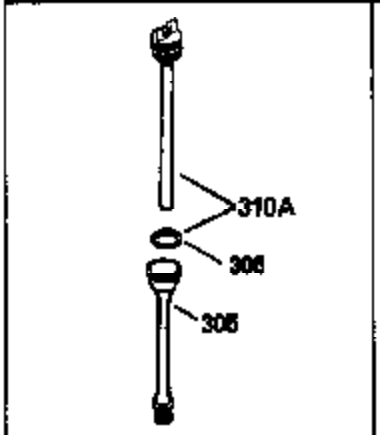

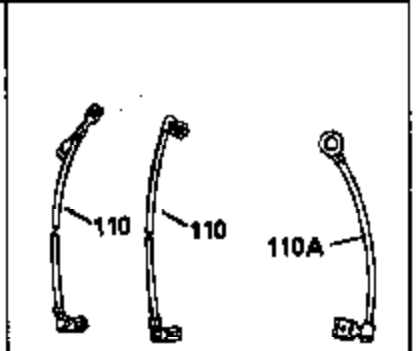

Ref #	Part Number	Qty	Description
1	35385		Cylinder (Incl. 2,20,72,72A) (3-1/8" Bore)
2	27652		Pin, Dowel
72	27642		Plug, Oil drain
110	35187		Ground Wire
169	27896A		* Gasket, Breather cover
170	28423		Body, Breather
171	28424		Element, Breather
172	28425		Cover, Valve spring
173	35350		Tube, Breather
174	650128		Screw, 10-24 x 1/2"
178	29752		Nut & Lockwasher, 1/4-28
207	33878		Link, Governor-to-throttle
227	730127		Air Cleaner Ass'y. (Incl. 238, 239, 240, 241, 243, 245 & 370)(Use as required)
227	730164		Air Cleaner Ass'y. (Incl. 238, 239, 240, 241, 243 & 245) (Use as required)
228	650824		Stud, 1/4-20 x 7.33 (Use as required)
228	650851		Stud, 1/4-20 x 8.1 (Use as required)(Used with drilled thru elbow)
239	27272A		* Gasket, Air cleaner
240	33269A		Cover, Air cleaner
241	33266		Bracket, Air cleaner
242	33267		Bracket, Air cleaner
243	28820		Screw, 10-32 x 1/2"
245	33268		Element, Air cleaner
251	650513		Nut, Wing, 1/4-20
275	33280A		Muffler
276	35740		Plate, Muffler locking
277	650729		Screw, 5/16-18 x 3-3/16"
292	26460		Clamp, Fuel line
293	35807		Fuel pump, Impulse
303	32958		Fitting, Fuel
305	35554		Tube, Oil fill
306	35499		"O" Ring
370B	34387		Decal, Instruction Can be used on HM80 with stamped steel recoil starter.
370F	35344		Decal, Throttle
370J	34870		Decal, Instruction Can be used on HM80 with diecast starter.
380	632397		Carburetor (Incl. 184) (Refer to Division 5, Section A, page A3-10 for breakdown or Fiche 18A-2, Grid F-3)
394	35791		Repair Kit, Fuel pump

ILLUSTRATION SHOWS TYPICAL PARTS ONLY. ORDER BY PART NUMBER. PARTS NOT LISTED ARE SUPPLIED BY OEM.

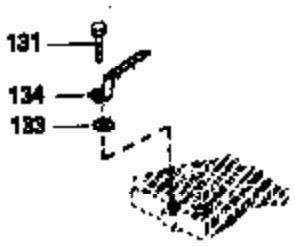

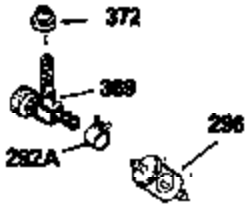

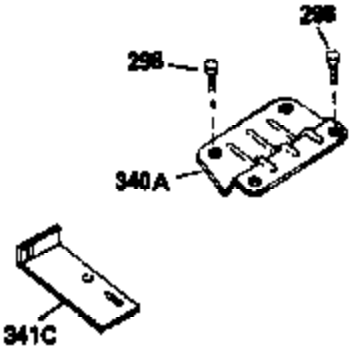

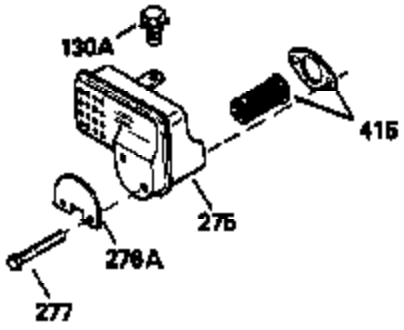

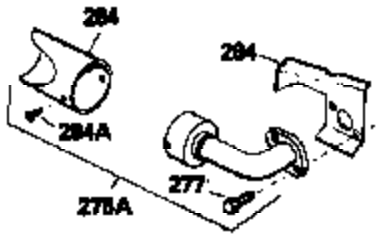

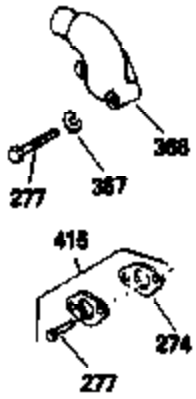

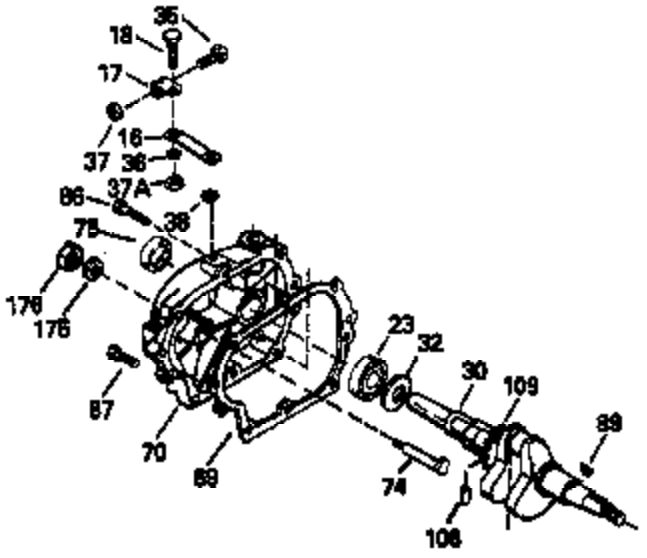

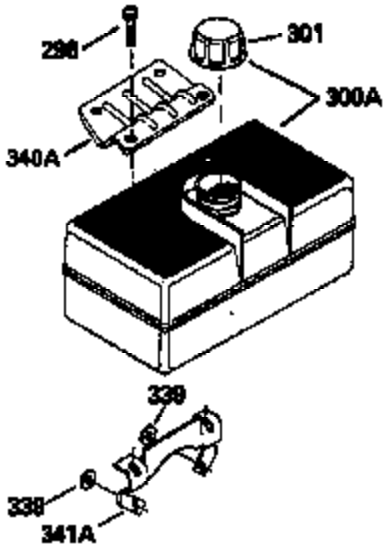

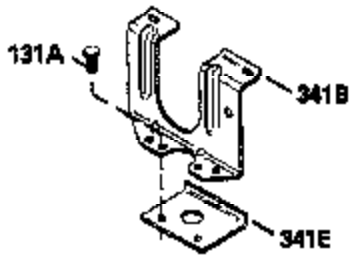

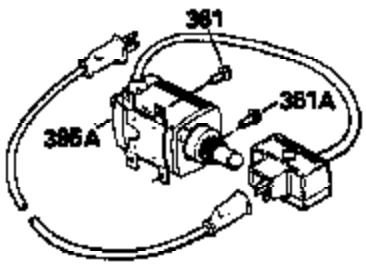

Ref #	Part Number	Qty	Description
16	33454		Governor Lever Assy.
17	29916		Clamp, Governor lever
18	650548		Screw, 8-32 x 5/16"
23	33627		Bearing, Ball
30	35420A		Crankshaft
32	33628		Washer, Thrust
35	29826		Screw, 10-32 x 3/4"
36	29918		Lockwasher, # 8 E.T.
37	29216		Nut & Lockwasher, 10-32
37A	30322		Locknut, 8-32
38	29642		Ring, Retaining
69	35262		* Gasket, Cylinder cover
70	33626B		Cyl.Cover(Incl.71,74,75,80,175,176,31 1,312)
74	31855		Retainer, Bearing
75	33625		Seal, Oil
86	650833		Screw, 1/4-20 x 1-3/16"
87	650832		Screw, 1/4-20 x 1-11/16"
89	32589		Key, Flywheel
130A	6021A		Screw, 5/16-18 x 1-1/2" (Use as req.,but not w/650691 washer)
131	650802		Screw, 1/4-20 x 5/8" (Use as required)
131	650738		Screw, 1/4-20 x 5/8 (Use as required)
131A	650713		Screw, 5/16-18 x 5/8" (Use as require d)
175	650778		Lockwasher
176	650580		Nut, Lock, 10-24
242	33267		Bracket, Air cleaner
274	35865		Gasket, Exhaust (Use as required)
275	33280A		Muffler
277	650729		Screw, 5/16-18 x 3-3/16"
314	650873		Screw, 1/4-20 x 3/4"
370J	34870		Decal, Instruction Can be used on HM80 with diecast starter.
394	35791		Repair Kit, Fuel pump
415	730130		Exh.Adaptor Kit (Incl.274,277)(As req uired)

ILLUSTRATION SHOWS TYPICAL PARTS ONLY. ORDER BY PART NUMBER. PARTS NOT LISTED ARE SUPPLIED BY OEM.

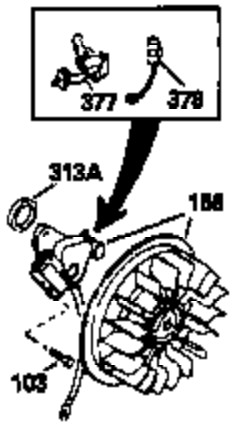

STD. POINT

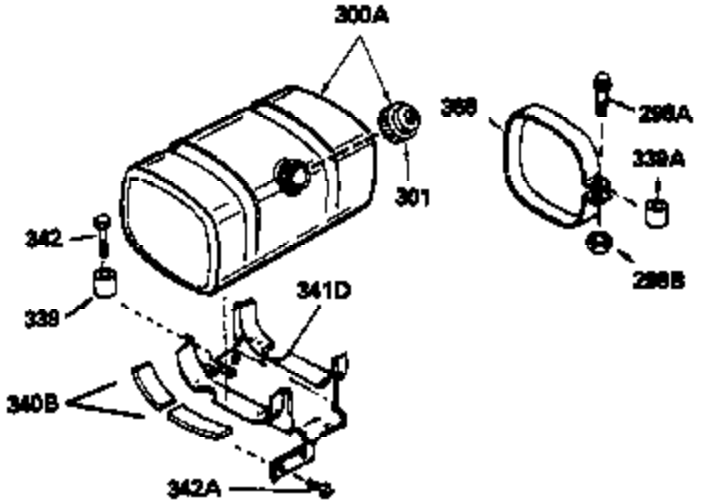

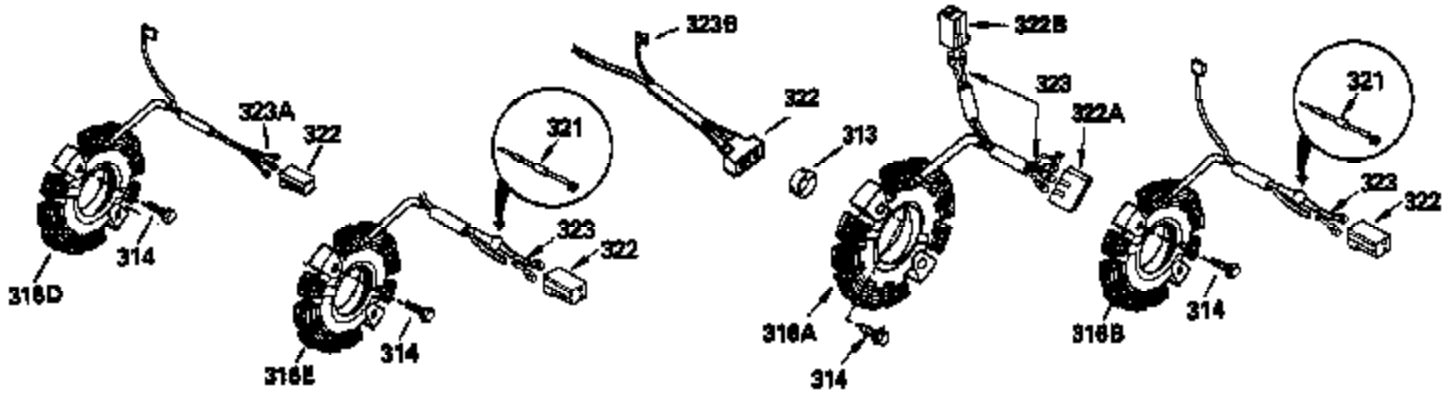

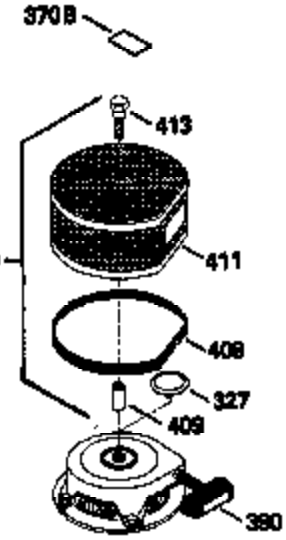

OPTIONAL
DEBRIS SCREEN KIT

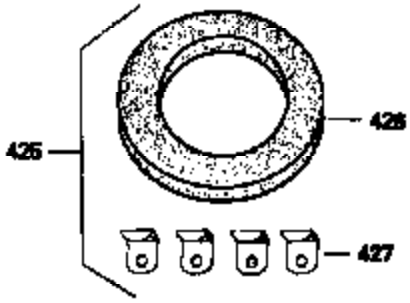

OPTIONAL
STARTER MUFF KIT

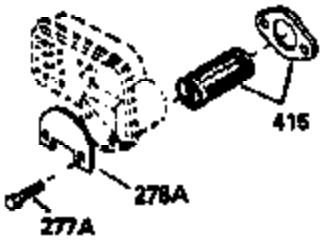

OPTIONAL
SPARK ARRESTOR KIT

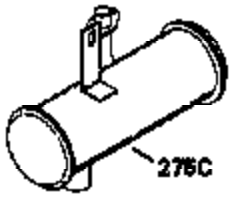

OPTIONAL
QUIET MUFFLER

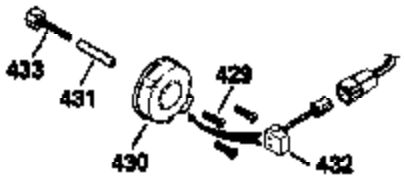

OPTIONAL
ADD-ON ALTERNATOR
AC LIGHTING OR DC CHARGING

Ref #	Part Number	Qty	Description
103	650814		Screw, Torx T-15, 10-24 x 1"
242	33267		Bracket, Air cleaner
275C	35824		Muffler (Optional quiet muffler)
277A	650696		Screw, 5/16-18 x 2-3/4" (Used with 27 6A)
314	650873		Screw, 1/4-20 x 3/4"
316A	611097		Alt.Coil (7 amp DC)(Incl.322A,322B,32 3)
327	35392		Plug, Starter
342	30063		Screw, Torx T-30, 1/4-20 x 1/2"
370J	34870		Decal, Instruction Can be used on HM80 with diecast starter.
370B	34387		Decal, Instruction Can be used on HM80 with stamped steel recoil starter.
394	35791		Repair Kit, Fuel pump
408	35570		Seal, Screen (Can be used on HM80 with stamped steel recoil starter.)
409	35569		Spacer, Screen
410	730573		Debris Screen Kit (Incl. 327, 370B, 408, 409, 411 & 413)
411	35568		Screen, Debris
413	650907		Screw, 5/16-18 x 1-5/8" (Can be used on HM80 with stamped steel recoil starter)
415	730130		Exh.Adaptor Kit (Incl.274,277)(As req uired)
425	730572		Starter Muff Kit (Incl. 370J, 426 & 4 27)
426	34687		Air cleaner, Starter
427	34869		Starter Air Cleaner Bracket (Optional)
429	650868		Screw, 8-18 x 1-1/8" (3 Required)
430	611077		Alternator, Add on
431	590609		Centering tube (Use with engines equipped with diecast aluminum starter)
431	590610		Centering tube
432	611078		A.C. Lighting Connector
432	611079		D.C. Charging Connector
433	590611		Alternator Shaft (4.00") (Use with engines equipped with diecast aluminum starter)
433	590636		Alternator Shaft (Use with engines equipped with stamped steel starter) (Use as required) (Refer to Mechanic's Handbook for installation instructions).