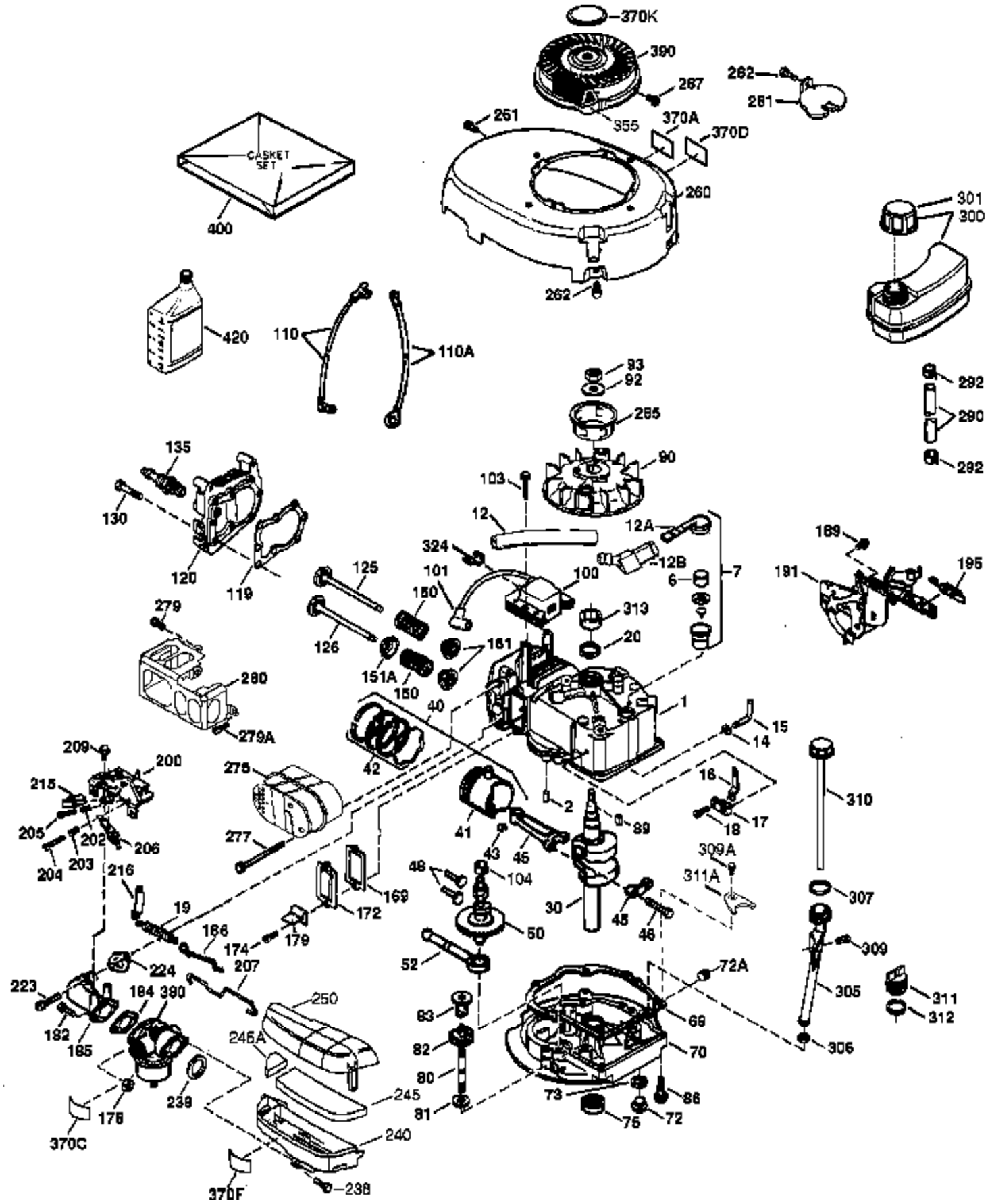
370K
390
267
262
261
355
370A
370D
251
CASKET SET
400
260
301
300
262
420
110
110A
93
92
292
290
265
292
135
90
103
130
12
12A
324
12B
169
120
119
125
101
100
6
7
191
195
150
313
279
126
161
20
151A
280
150
40
1
279A
15
14
209
200
42
275
16
310
215
2
205
202
206
41
89
17
18
277
43
45
309A
204
203
216
48
104
311A
307
169
172
30
45
46
19
166
179
50
174
309
224
207
52
72A
223
184
390
250
305
311
63
69
182
185
246A
82
70
312
306
80
245
73
86
239
81
75
72
176
370C
240
370F
238

| Ref # | Part Number | Qty | Description |
|---|---|---|---|
| 1 | 37312 | 1 | Cylinder (Incl. 2 & 20) |
| 2 | 26727 | 2 | Dowel Pin |
| 6 | 33734 | 1 | Breather Element |
| 7 | 36557 | 1 | Breather Ass'y. (Incl. 6 & 12A) |
| 12A | 36558 | 1 | Breather Cover & Tube |
| 14 | 28277 | 1 | Washer |
| 15 | 30589 | 1 | Governor Rod (Incl. 14) |
| 16 | 34839A | 1 | Governor Lever |
| 17 | 31335 | 1 | Governor Lever Clamp |
| 18 | 651018 | 1 | Screw, Torx T-15, 8-32 x 19/64" |
| 19 | 33578 | 1 | Extension Spring |
| 20 | 32600 | 1 | Oil Seal |
| 30 | 37313 | 1 | Crankshaft |
| 40 | 40034 | 1 | Piston, Pin & Ring Set (Std.) |
| 41 | 40032 | 1 | Piston & Pin Ass'y. (Std.) (Incl. 43) |
| 42 | 40036 | 1 | Ring Set (Std.) |
| 43 | 20381 | 2 | Piston Pin Retaining Ring |
| 45 | 30963B | 1 | Connecting Rod Ass'y. (Incl. 46) |
| 46 | 32610A | 2 | Connecting Rod Bolt |
| 48 | 27241 | 2 | Valve Lifter |
| 50 | 37575 | 1 | Camshaft (NCR)(Incl. 104) |
| 52 | 29914 | 1 | Oil Pump Ass'y. |
| 69 | 35261 | 1 | * Mounting Flange Gasket |
| 70 | 37620 | 1 | Mounting Flange (Incl. 72 thru 83,311 ) |
| 72 | 37614 | 1 | Oil Drain Plug |
| 75 | 26208 | 1 | Oil Seal |
| 80 | 30574A | 1 | Governor Shaft |
| 81 | 30590A | 1 | Washer |
| 82 | 30591 | 1 | Governor Gear Ass'y. (Incl. 81) |
| 83 | 30588A | 1 | Governor Spool |
| 86 | 650488 | 6 | Screw, 1/4-20 x 1-1/4" |
| 89 | 611004 | 1 | Flywheel Key |
| 90 | 611112 | 1 | Flywheel |
| 92 | 650815 | 1 | Belleville Washer |
| 93 | 650816 | 1 | Flywheel Nut |
| 100 | 34443C | 1 | Solid State Ignition |
| 101 | 610118 | 1 | Spark Plug Cover |
| 103 | 651007 | 2 | Screw, Torx T-15, 10-24 x 15/16" |
| 104 | 37480 | 1 | Cam Bushing |
| 110 | 37047 | 1 | Ground Wire |
| 119 | 37314 | 1 | * Cylinder Head Gasket |
| 120 | 37316 | 1 | Cylinder Head |
| 125 | 36471 | 1 | Exhaust Valve (Std.) (Incl. 151) |
| 125 | 36472 | 1 | Exhaust Valve (1/32" OS) (Incl. 151) |
| 126 | 29314C | 1 | Intake Valve (Std.) (Incl. 151) |
| 130 | 6021A | 8 | Screw, 5/16-18 x 1-1/2" |
| 135 | 35395 | 1 | Resistor Spark Plug (RJ19LM) |
| 150 | 31672 | 2 | Valve Spring |
| 151A | 40016A | 1 | Intake Valve Seal |
| 151 | 31673 | 2 | Valve Spring Cap |
| 169 | 36783 | 1 | * Valve Cover Gasket |
| 172 | 36784 | 1 | Valve Cover |
| 174 | 30200 | 2 | Screw, 10-24 x 9/16" |
| 178 | 29752 | 2 | Nut & Lock Washer, 1/4-28 |
| 182 | 6201 | 2 | Screw, 1/4-28 x 7/8" |
| 184 | 26756 | 1 | * Carburetor To Intake Pipe Gasket |
| 185 | 36785 | 1 | Intake Pipe |
| 186 | 32653 | 1 | Governor Link |

| Ref # | Part Number | Qty | Description |
|---|---|---|---|
| 189 | 650839 | 1 | Screw, 1/4-20 x 3/8" |
| 191 | 36559A | 1 | S.E. Brake Bracket (Incl. 195) |
| 195 | 610973 | 1 | Terminal |
| 207 | 34336 | 1 | Throttle Link |
| 216 | 33086 | 1 | R.P.M. Adjusting Lever |
| 223 | 650451 | 2 | Screw, 1/4-20 x 1" |
| 224 | 36786 | 1 | * Intake Pipe Gasket |
| 238 | 650806 | 2 | Screw, 10-32 x 5/8" |
| 239 | 34338 | 1 | * Air Cleaner Gasket |
| 240 | 37115 | 1 | Air Cleaner Body (Incl. 239) |
| 245 | 37116 | 1 | Air Cleaner Filter |
| 245A | 37117 | 1 | Pre-Air Cleaner Filter |
| 250 | 37118 | 1 | Air Cleaner Cover |
| 260 | 37309 | 1 | Blower Housing |
| 261 | 30200 | 2 | Screw, 10-24 x 9/16" |
| 262 | 650831 | 2 | Screw, 1/4-20 x 1/2" |
| 275 | 37192A | 1 | Muffler |
| 277 | 650988 | 2 | Screw, 1/4-20 x 2-5/16" |
| 285 | 35000A | 1 | Starter Cup |
| 287 | 650926 | 2 | Screw, 8-32 x 21/64" |
| 290 | 34357 | 1 | Fuel Line |
| 292 | 26460 | | Fuel Line Clamp |
| 292 | 26460 | 2 | Fuel Line Clamp |
| 300 | 35586 | 1 | Fuel Tank (Incl. 292 & 301) |
| 301 | 36246 | 1 | Fuel Cap |
| 311 | 27625 | 1 | Oil Fill Plug |
| 312 | 29673 | 1 | * Oil Fill Plug Gasket |
| 313 | 34080 | 1 | Spacer |
| 370C | 37318 | 1 | Primer Decal (3 X) |
| 370K | 36695 | 1 | Starter Decal |
| 380 | 640270 | 1 | Carburetor (Incl. 184) |
| 390 | 590737 | 1 | Rewind Starter (NOTE: This engine could hav e been built with 590694 starter.) |
| 400 | 37315 | 1 | * Gasket Set (Incl. items marked PK i n notes). Incl. Part #'s 26756 (1), 34338 (1), 36783 (1), 36786 (1), 36996 (1), 37130 (1), 37314 (1) |

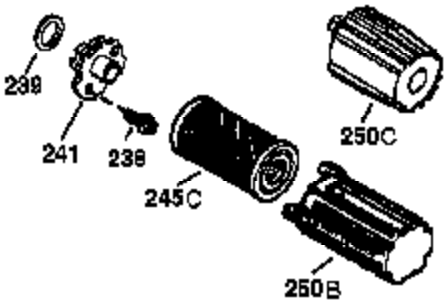
239
241
238
245C
250C
250B

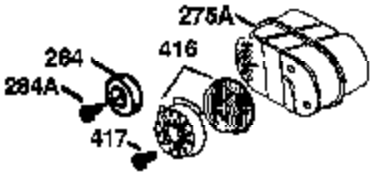
275A
416
264
284A
417

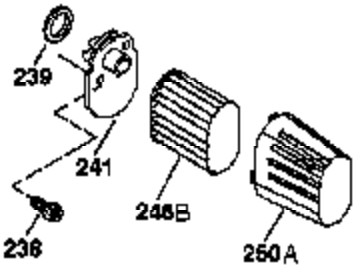
239
241
236
246B
250A

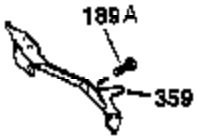
189A
359

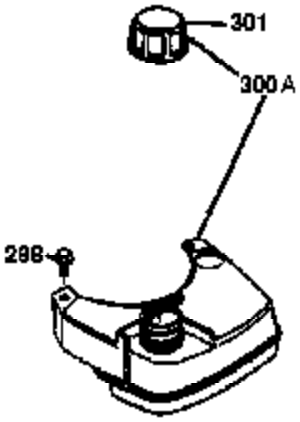
301
300A
298

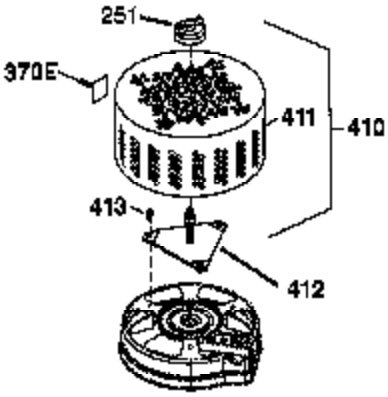
251
370E
411
410
413
412

351
350

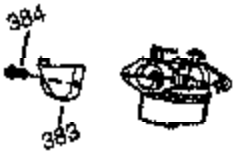
384
383

| Ref # | Part Number | Qty | Description |
|---|---|---|---|
| 238 | 650806 | 2 | Screw, 10-32 x 5/8" |
| 239 | 34338 | 1 | * Air Cleaner Gasket |
| 275A | 36838A | 1 | Spark Arrestor Muffler (Optional) (Incl. 284,284A,416 & 417) |
| 284 | 36663 | 1 | Muffler Deflector (Incl. 284A)(Option al) |
| 284A | 650821 | 1 | Screw, 10-32 x 1/2" (Optional) |
| 301 | 36246 | 1 | Fuel Cap |
| 416 | 36085 | 1 | Spark Arrestor Kit (Incl. 417)(Option al) |
| 417 | 650821 | 1 | Screw, 10-32 x 1/2" (Optional) |