ILLUSTRATION SHOWS TYPICAL PARTS ONLY. ORDER BY PART NUMBER. PARTS NOT LISTED ARE SUPPLIED BY OEM.

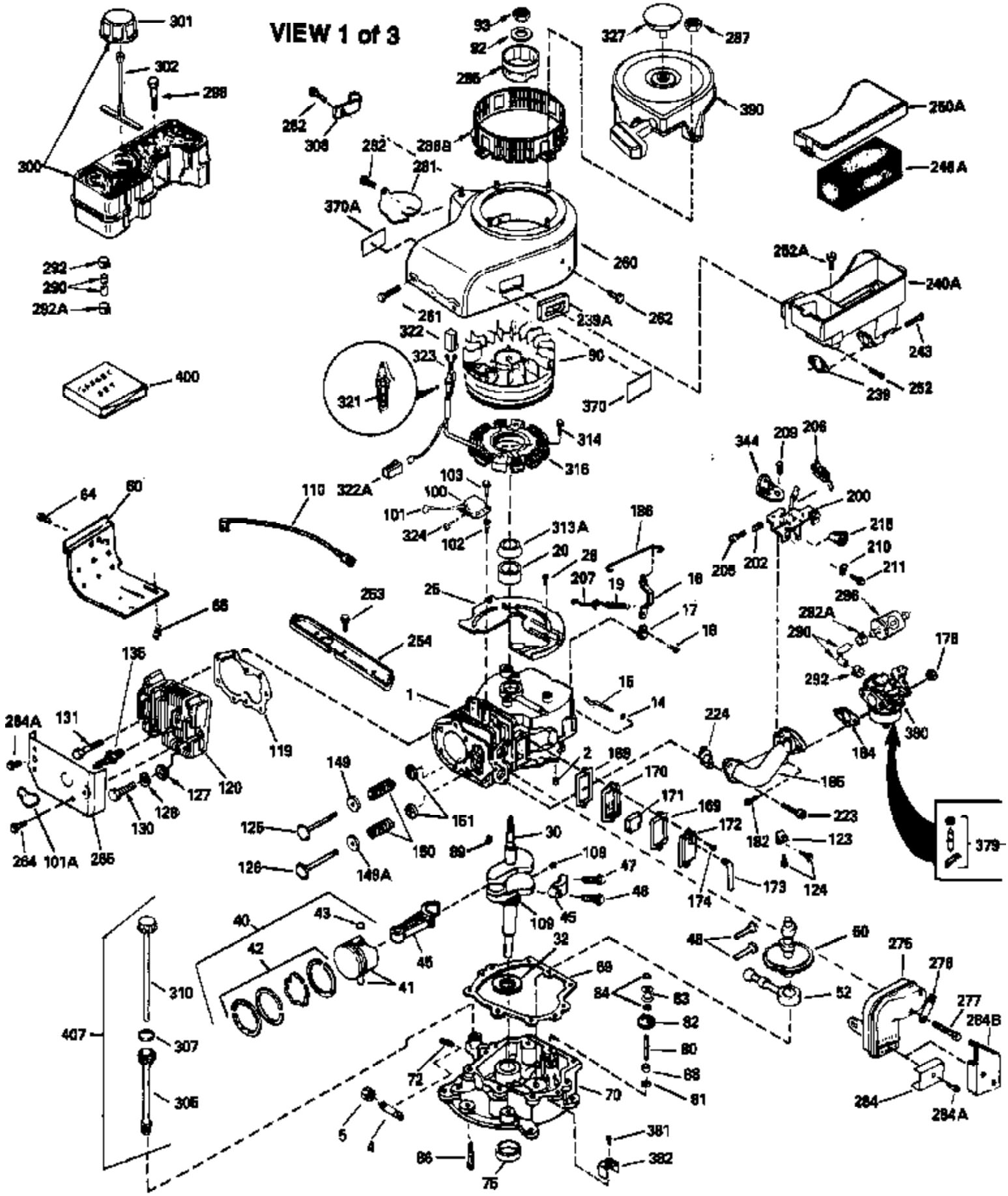

Ref #	Part Number	Qty	Description
1	34320A		Cylinder (Incl. 2 & 20) (2-15/16" Bor e)
2	27652		Pin, Dowel
14	28277		Washer, Flat
15	35082		Rod, Governor
16	32651		Lever, Governor
17	31335		Clamp, Governor lever
18	650548		Screw, 8-32 x 5/16"
19	34043		Spring, Extension
20	32630		Seal, Oil
25	35256A		Baffle, Blower housing
26	650561		Screw, 1/4-20 x 5/8"
30	34181A		Crankshaft (Incl. 108 & 109)
32	35653		Washer (1-3/8" I.D. 1-3/4" O.D. .015" thick)
40	34549		Piston, Pin & Ring Set (Std.) (2-15/1 6")
40	34550		Piston, Pin & Ring Set (.010" OS)
40	34551		Piston, Pin & Ring Set (.020" OS)
41	34321A		Piston & Pin Ass'y. (Std.)(Incl.43)(2 -15/16")
41	34322A		Piston & Pin Ass'y. (.010" OS) (Incl. 43)
41	34323A		Piston & Pin Ass'y. (.020" OS) (Incl. 43)
42	34324		Ring Set (Std.) (2-15/16" Bore)
42	34325		Ring Set (.010" OS)
42	34326		Ring Set (.020" OS)
43	27888		Ring, Piston Pin retaining
45	32591C		Rod Assy., Connecting (Incl. 47)
47	650662C		Bolt, Connecting rod (2 pieces)
48	34034		Lifter, Valve
50	34040		Camshaft (MCR)
52	31356		Pump Assy., Oil
60	33273A		Extension, Blower housing
64	30063		Screw, Torx T-30, 1/4-20 x 1/2"
65	650128		Screw, 10-24 x 1/2"
69	35262		* Gasket, Mounting flange
70	33580		Flange Ass'y. (Incl. 72, 75, 80 & 81)
72	31927		Plug, Pipe
75	31950		Seal, Oil
80	30668		Shaft, Mechanical governor
81	30590A		Washer, Flat
82	30591		Gear Assy., Governor (Incl. 81)
83	30588A		Spool, Governor
84	29193		Ring, Retaining
86	650833		Screw, 1/4-20 x 1-3/16"
88	31707A		Governor Spacer Assy. (Incl. 81)
89	32589		Key, Flywheel
92	650815		Washer, Belleville
93	8116		Nut, Hex, 1/2-20
101	610118		Cover, Spark plug (Use as required)
103	650489		Screw, 1/4-20 x 5/8"
108	29783		Pin, Crankshaft
109	33245		Gear, Crankshaft
110	30831		Ground Wire
119	34327A		* Gasket, Cylinder head
120	34030		Head, Cylinder
123	33261		Bracket, Intake pipe
124	650738		Screw, 1/4-20 x 5/8"
125	27878A		Exhaust Valve (Std.) (Incl. 151)
125	27880A		Exhaust Valve (1/32" OS) (Incl. 151)
126	34035		Intake Valve (Std.) (Incl. 151)
126	34036		Intake Valve (1/32" OS) (Incl. 151)

Ref #	Part Number	Qty	Description
127	650691		Washer, Flat (Do not use with 6021A s crew)
128	650690		Washer, Belleville
130	650694A		Screw, 5/16-18 x 2"
131	6021A		Screw, 5/16-18 x 1-1/2" (Do not use w /650691)
131	650788		Screw, 5/16-18 x 3/4"
135	33636		Resistor Spark Plug
149A	35862		Valve Spring Cap
149	27882		Valve Spring Cap
150	27881		Spring, Valve
151	32581		Valve Spring Keeper
169	27896A		* Gasket, Breather
170	28423		Body Assy., Breather
171	28424		Element, Breather
172	28425		Cover, Breather
173	35350		Tube, Breather
174	650128		Screw, 10-24 x 1/2"
178	29752		Nut & Lockwasher, 1/4-28
182	30088A		Screw, 1/4-28 x 1"
184	33263		* Gasket, Carburetor
185	34926		Pipe, Intake
186	33860		Link, Governor-to-throttle
200	35201		Control Bracket
202	33802		Spring, Compression
205	650777		Screw, 6-32 x 21/32"
206	610973		Terminal Assy. (Use as required)
209	30200		Screw, 10-24 x 9/16"
210	27793		Clip, Conduit
211	28942		Screw, 10-32 x 3/8"
223	650378		Screw, Torx T-30, 5/16-18 x 1-1/8"
224	27915A		* Gasket, Intake pipe
239A	34912		* Gasket, Air cleaner-to-housing
239	33629		* Gasket, Air cleaner
243	650834		Screw, 10-32 x 1-17/32"
246A	34910		Element, Air cleaner
250A	34911		Cover, Air cleaner
252A	650784		Screw, 10-24 x 11/16"
253	650651		Screw, 1/4-20 x 5/8"
260	33635B		Blower Housing (For electric starter) NOTE: Replacement hardware may differ when servicing starter assy. or blower housing. Refer to Service Bulletin 508.
261	650788		Screw, 5/16-18 x 3/4"
262	29747B		Screw, 5/16-24 x 21/32"
264	650802		Screw, 1/4-20 x 5/8"
264A	650738		Screw, 1/4-20 x 5/8"
265	33272A		Cover, Cylinder head
275	33280A		Muffler
276	31588		Plate, Muffler locking
277	650729		Screw, 5/16-18 x 3-3/16" (Use As Req.)
277	651002		Screw, 5/16-18 x 4-3/16" (Use As Req.)
277	30196		Screw, 5/16-18 x 3/4" (Use As Req .)
281	33013		Cover, Starter bubble
282	650760		Screw, 8-32 x 3/8"
287	29752		Nut & Whizlock, 1/4-28
290	30705		Fuel Line (Braided 16") (40cm)
290	29774		Fuel Line (Braided 8-1/4") (21cm)(As req.)
292A	35864		Clamp, fuel filter to fuel line
292	26460		Clamp, Fuel line

Ref #	Part Number	Qty	Description
298	28763		Screw, 10-32 x 35/64"
300	33583B		Fuel Tank (Incl. 292, 298 & 301) NOTE: This tank was built with different size fuel inlet opening. Tanks with the 1-3/16" I.D. opening use fuel cap 34210. Tanks with the 1-1/2" I.D. opening use fuel cap 35355.
301	33032		Fuel Cap (Use as required in early pr od.)
301	34210		Fuel Cap (Use as required in early pr od.)
307	33590		"O" Ring
310	35837		Dipstick, Oil (Incl. 307)
370	34346		Decal, Instruction
379	631021		Inlet Needle, Seat & Clip Assy.
380	632183		Carburetor (Incl. 184) (Refer to Division 5, Section A, page 176 for breakdown or Fiche10A, Grid E-9)
381	29117		Screw, 8-32 x 5/16 (Not used on late prod.)
382	33581		Screen, Oil filter (Not used in late prod.)
390	590479		Rewind Starter NOTE: Replacement hardware may differ when servicing starter assy. or blower housing. Refer to Service Bulletin 508. (Refer to Division 5, Section C, page 30 for breakdown or Fiche 10A, Grid G-9))
400	33279G		* Gasket Set (Incl. items marked *)
407	35837		Fill Tube & Dipstick Assy.

ILLUSTRATION SHOWS TYPICAL PARTS ONLY. ORDER BY PART NUMBER. PARTS NOT LISTED ARE SUPPLIED BY OEM.

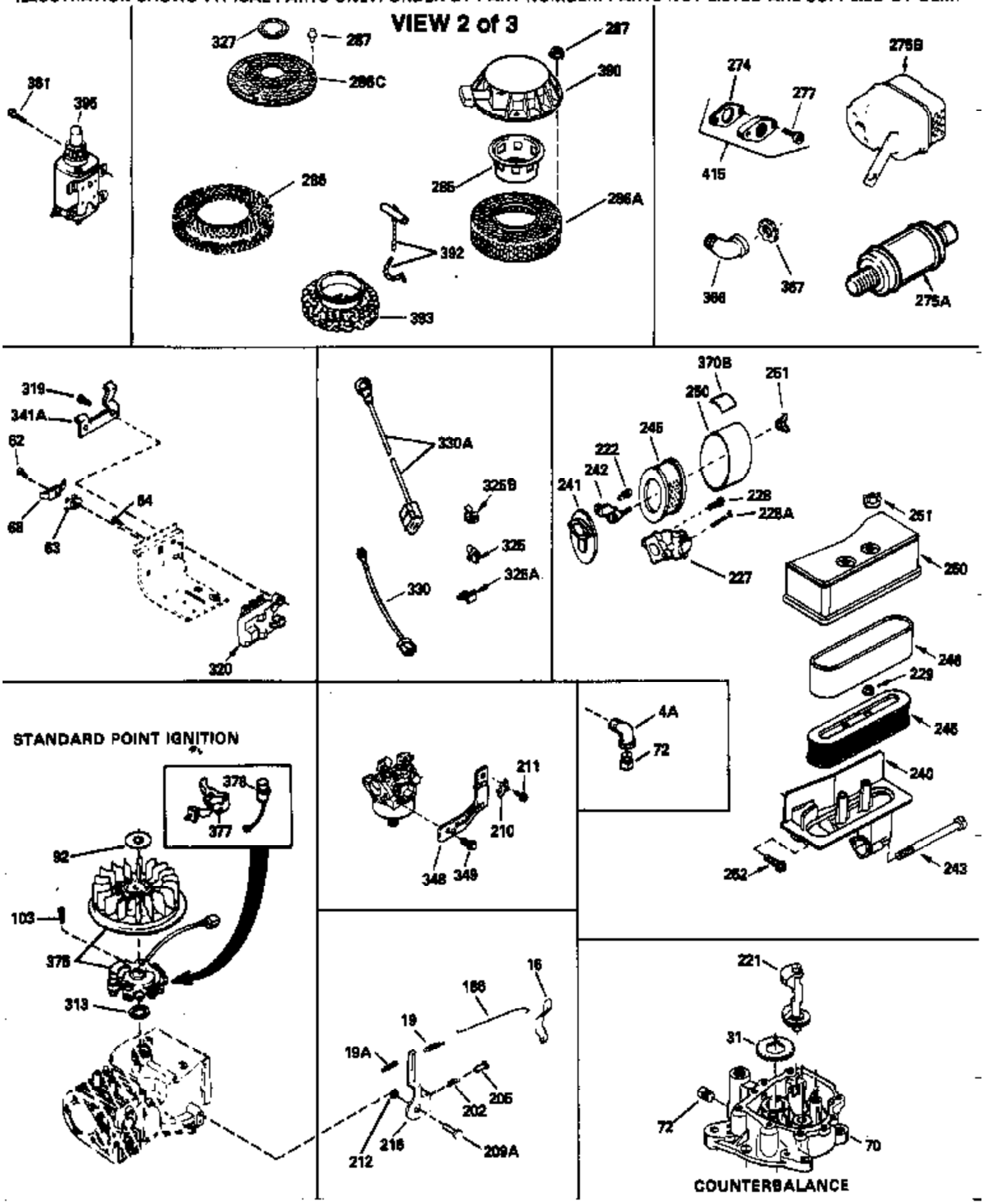

Ref #	Part Number	Qty	Description
16	32651		Lever, Governor
19	34043		Spring, Extension
19A	35203		Spring, Extension
62	650760		Screw, 8-32 x 3/8"
63	28545		Grommet, Plastic
64	30063		Screw, Torx T-30, 1/4-20 x 1/2"
68	33356		Terminal, Ground
70	33580		Flange Ass'y. (Incl. 72, 75, 80 & 81)
72	31927		Plug, Pipe
92	650815		Washer, Belleville
103	650489		Screw, 1/4-20 x 5/8"
186	33860		Link, Governor-to-throttle
202	33802		Spring, Compression
205	650777		Screw, 6-32 x 21/32"
210	27793		Clip, Conduit
211	28942		Screw, 10-32 x 3/8"
216	35202A		R.P.M. Adj. Lever (Incl.19A,209A,212, 222,239)
222	650807		Screw, 10-32 x 27/64"
240	34909		Body, Air cleaner
243	650834		Screw, 10-32 x 1-17/32"
274	27930		* Exhaust Gasket (use as required)
277	650729		Screw, 5/16-18 x 3-3/16" (Use As Req.)
277	651002		Screw, 5/16-18 x 4-3/16" (Use As Req.)
277	30196		Screw, 5/16-18 x 3/4" (Use As Req .)
286	33662		Hub & Screen Assy., Starter
287	29752		Nut & Whizlock, 1/4-28
313	33876		Gasket, Stator
375	610842		Magneto NOTE: The following completemagnetos are not available as an assembly. The magneto numbers are shown for reference purposes only. Order component parts individually, as shown in parts breakdown. (Refer to Division 5, Section B, page 28 for breakdown or Fiche 10A, Grid G-2)
377	30547A		Contact Assy., Breaker
378	30548B		Condenser
390	590479		Rewind Starter NOTE: Replacement hardware may differ when servicing starter assy. or blower housing. Refer to Service Bulletin 508. (Refer to Division 5, Section C, page 30 for breakdown or Fiche 10A, Grid G-9))
415	730130		Exh.Adapter Kit (Incl. 274 & 277)(As req.)

ILLUSTRATION SHOWS TYPICAL PARTS ONLY. ORDER BY PART NUMBER. PARTS NOT LISTED ARE SUPPLIED BY OEM.

VIEW 3 of 3

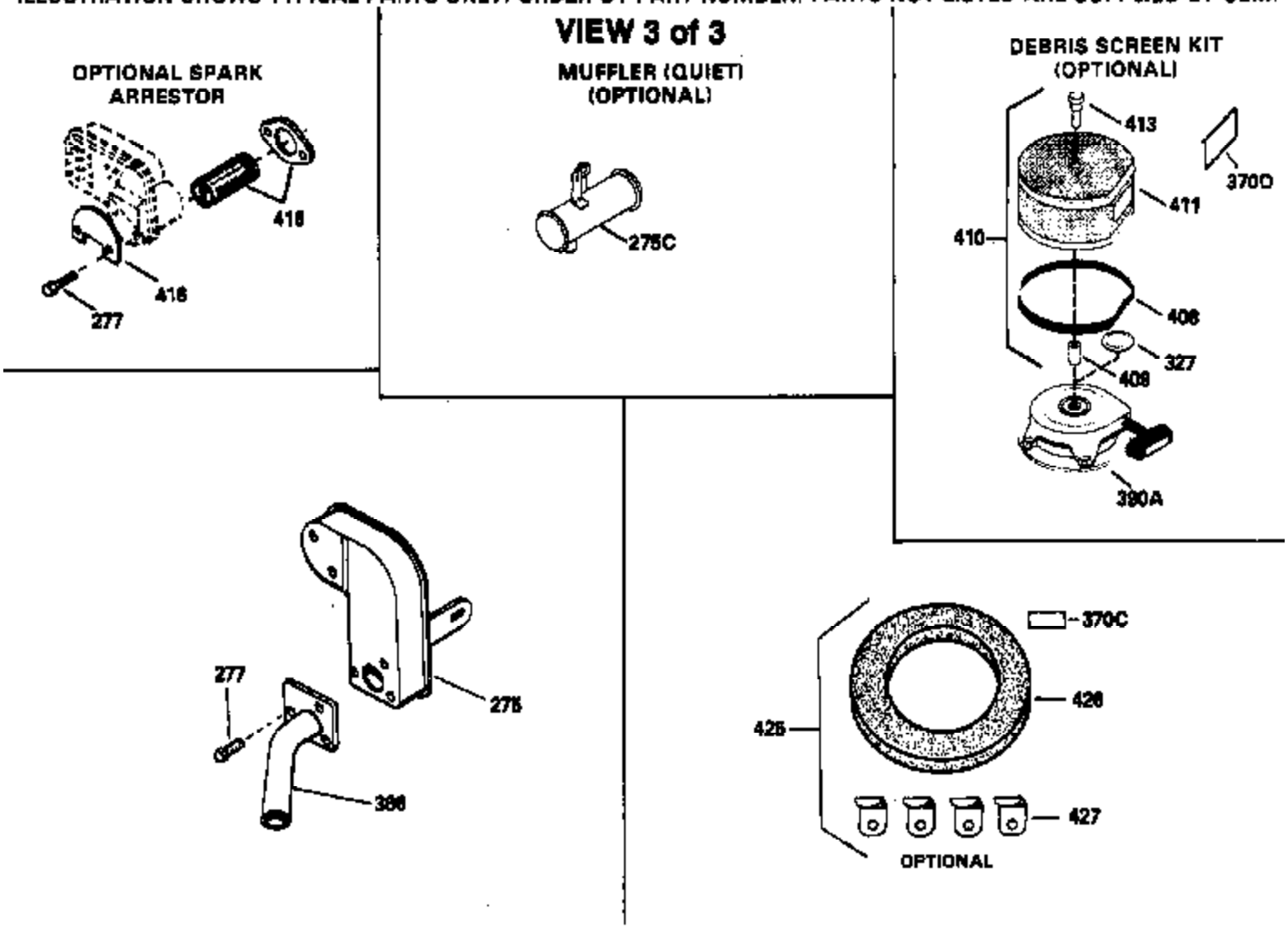

Ref #	Part Number	Qty	Description
275C	35824		Muffler (Quiet) (Optional)
275	33280A		Muffler
277	650729		Screw, 5/16-18 x 3-3/16" (Use As Req.)
277	651002		Screw, 5/16-18 x 4-3/16" (Use As Req.)
277	30196		Screw, 5/16-18 x 3/4" (Use As Req .)
370C	34870		Decal, Instruction (Optional)
370D	34387		Decal, Instruction (Optional)
408	35570		Screen Seal (Optional)
409	35569		Spacer (Optional)
410	730573		Opt.Screen Kit(Incl.370D,408,409,411, 413)
411	35568		Debris Screen (Optional)
413	650907		Screw, 5/16-18 x 1-5/8" (Optional)
416	34479		Spark Arrestor Kit (Optional)
425	730572		Starter Muff Kit(Incl.370C,426,427)(O pt.)
426	34687		Starter Air Cleaner (Optional)
427	34869		Starter Air Cleaner Bracket (Optional)