VIEW 1 OF 3

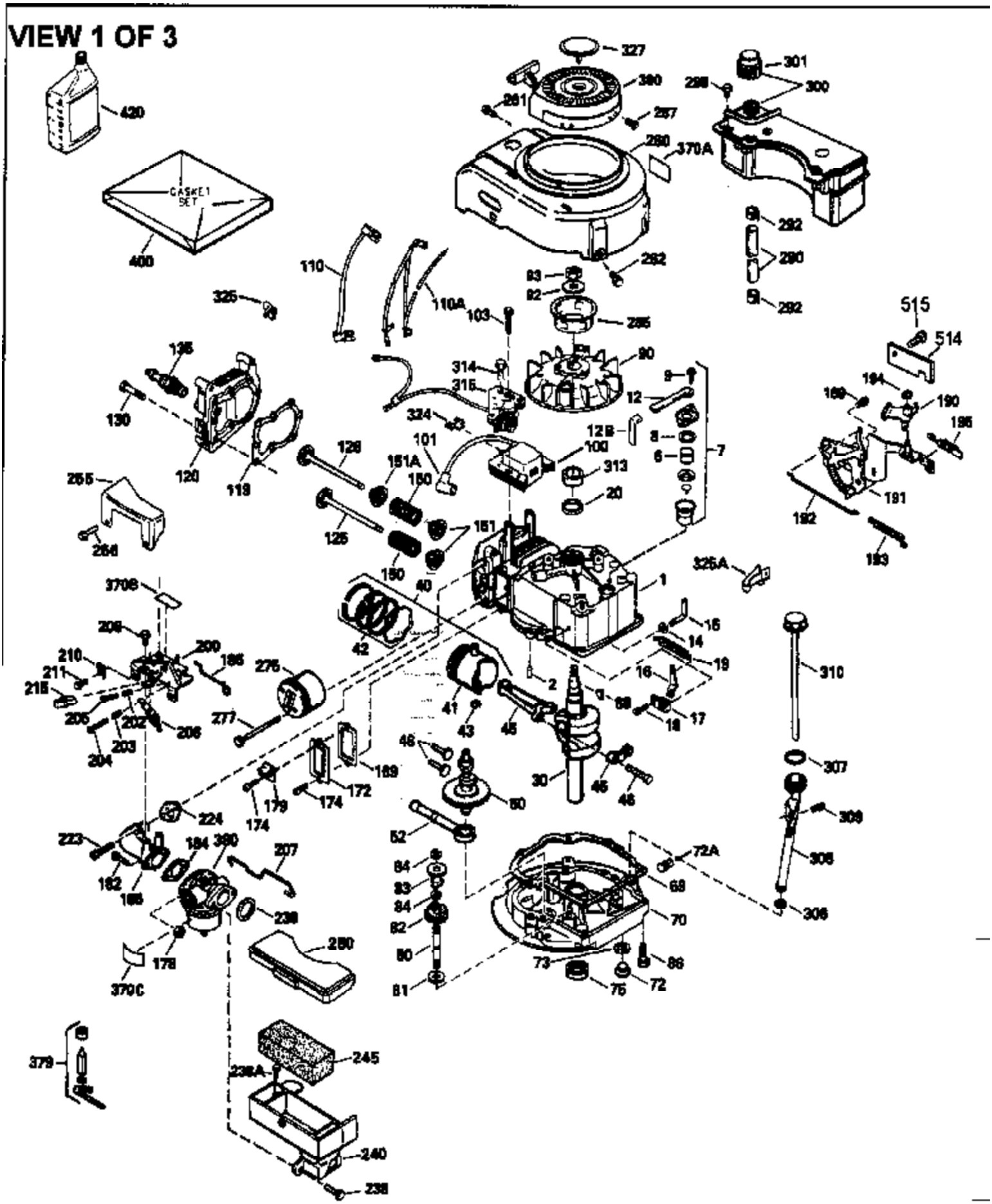
420
GASKET SET
400
327
390
261
267
280
370A
301
298
300
292
290
292
110
110A
103
285
90
314
315
324
12
9
8
6
7
12B
101
100
313
20
325
135
130
120
118
126
125
151A
150
151
150
40
42
255
254
515
514
194
189
190
196
191
192
193
325A
1
16
14
19
18
17
2
68
41
43
45
46
30
48
310
307
309
306
72A
69
70
73
66
72
75
80
52
84
83
82
81
370B
206
200
210
211
215
205
202
203
204
186
276
277
179
174
172
189
224
223
182
184
390
207
178
370C
238
250
379
236A
245
240
236

Ref #	Part Number	Qty	Description
1	33968B		Cylinder (Incl. 2 & 20) (2-13/16")
2	26727		Pin, Dowel
6	33734		Element, Breather
7	34214A		Breather Ass'y. (Incl. 6, 8, 9, 12 , & 12A)
8	33735		* Gasket, Breather
9	30200		Screw, 10-24 x 9/16"
12	33886		Tube, Breather
14	28277		Washer, Flat
15	30589		Rod, Governor (Incl. 14)
16	31383A		Lever, Governor
17	31335		Clamp, Governor lever
18	650548		Screw, 8-32 x 5/16"
19	31386		Spring, Governor
20	32600		Seal, Oil
30	34570A		Crankshaft
32	32323		Washer, Thrust NOTE: This thrust washer maynot be required if a new crankshafthas been installed. Check the proper Mechanic's Handbook for acceptable end play. Use this .010" thrust washer if excess end play is measured.
40	34535		Piston, Pin & Ring Set (Std.) (2-13/1 6")
40	34536		Piston, Pin & Ring Set (.010" OS)
40	34537		Piston, Pin & Ring Set (.020" OS)
41	33562B		Piston & Pin Ass'y.(Incl. 43)(Std.)(2 -13/16")
41	33563B		Piston & Pin Ass'y. (Incl. 43) (.010" OS)
41	33564B		Piston & Pin Ass'y. (Incl. 43) (.020" OS)
42	33567		Ring Set (Std.) (2-13/16" Bore)
42	33568		Ring Set (.010" OS)
42	33569		Ring Set (.020" OS)
43	20381		Ring, Piston pin retaining
45	32875		Rod Assy., Connecting (Incl. 46)
46	32610A		Bolt, Connecting rod
48	27241		Lifter, Valve
50	33553		Camshaft (MCR)
52	29914		Oil Pump Assy.
69	35261		* Gasket, Mounting flange
70	34311C		Flange Ass'y. (Incl. 72, 72A, 73, 75 & 80)
72	30572		Plug, Oil drain (Incl. 73)
72A	9556		Oil Drain Plug
73	28833		* Drain Plug Gasket (Not req. W/plastic plug)
75	27897		Seal, Oil
80	30574		Shaft, Governor
81	30590A		Washer, Flat
82	30591		Gear Assy., Governor (Incl. 81)
83	30588A		Spool, Governor
84	29193		Ring, Retaining
86	650488		Screw, 1/4-20 x 1-1/4"
89	611004		Flywheel Key
90	611046A		Flywheel
92	650815		Washer, Belleville
93	650816		Nut, Flywheel
100	34443A		Solid State Ignition
100	730207		Magneto-to-Solid State Conv. Kit (Includes solid state module, solid state flywheel key, and instructions.) (Use as required on external ignition engines only.)
101	610118		Cover, Spark plug (Use as required)
103	650814		Screw, Torx T-15, 10-24 x 1"
110	34231		Ground Wire

Ref #	Part Number	Qty	Description
118	730194		Rope Guide Kit (Use as required)
119	33554A		* Gasket, Head
120	34342		Head, Cylinder
125	29314B		Intake Valve (Std.) (Incl. 151) (Conventional Ports)
125	29315C		Intake Valve (1/32" OS) (Incl. 151) (Conventional Ports)
125	29313C		Exhaust Valve (Std.) (Incl. 151) (Inverted Ports)
126	29313C		Exhaust Valve (Std.) (Incl. 151) (Conventional Ports)
126	29315C		Exhaust Valve (1/32" OS) (Incl. 151) (Conventional Ports)
126	34776		Exhaust Valve (Std.) (Incl. 151) (Conventional Ports)
126	32644A		Intake Valve (Incl. 151) (Inverted Po rts)
130	6021A		Screw, 5/16-18 x 1-1/2" (Use as requi red)
130	650697A		Screw, 5/16-18 x 2-1/2" (Use as requi red)
135	33636		Resistor Spark Plug
150	31672		Spring, Valve
151	31673		Cap, Lower valve spring
167	650688		Screw, 10-32 x 1" (Drilled thru)
168	32924		Spring, Speed adjusting screw
169	27234A		Gasket, Valve spring box cover
172	32755		Cover, Valve spring box
174	650128		Screw, 10-24 x 1/2"
178	29752		Nut & Lockwasher, 1/4-28
182	6201		Screw, 1/4-28 x 7/8"
184	26756		* Gasket, Carburetor
186	34337		Link, Governor spring
200	33155A		Control Bracket (Incl. 206)
201	33150		Bracket, Over-ride
206	610973		Terminal (Use as required)
207	34336		Link, Throttle
209	30200		Screw, 10-24 x 9/16"
210	27793		Clip, Conduit
211	28942		Screw, 10-32 x 3/8"
223	650451		Screw, 1/4-20 x 1"
224	32649A		Gasket, Intake pipe
238	650806		Screw, 10-32 x 5/8"
239	34338		* Gasket, Air cleaner
240	34339		Body, Air cleaner
246E	35435		Filter, Pre-air (Use as required)
246	34340		Element, Air cleaner
250	34341A		Cover, Air cleaner
260	34475		Housing, Blower
261	30200		Screw, 10-24 x 9/16"
262	650831		Screw, 1/4-20 x 15/32"
277	650795		Screw, 1/4-20 x 2-1/4" (Use as requir ed)
277	650774		Screw, 1/4-20 x 2-3/8" (Use as requir ed)
277	792005		Screw, 1/4-20 x 2-1/2" (Use as requir ed)
287	650802		Screw, 1/4-20 x 5/8"
290	34357		Fuel Line (Epichlorohydrin 6-3/4")(17 cm)
290	29774		Fuel Line(Braided 8-1/4")(21 cm)(Use as req.)
290	30705		Fuel Line (Braided 16")(40 cm)(Use as req.)
290	30962		Fuel Line (Braided 32")(81 cm)(Use as req.)
292	26460		Clamp, Fuel line
298	28763		Screw, 10-32 x 35/64"
301	33032		Fuel Cap (Use as required)
305	34264		Oil Fill Tube
306	34265		Gasket, Oil fill tube

Ref #	Part Number	Qty	Description
306	34282		"O" Ring (This "O" ring is required with metal fill tube only when replacement mounting flange with .777 dia. oil fill hole has been used.)
307	33590		"O" Ring
309	650562		Screw, 10-32 x 1/2"
310	34267		Oil Dipstick (Incl. 150)
313	34080		Spacer, Flywheel key
326	34113		Plug, Screen
370A	34346		Decal, Instruction
370H	34387		Decal, Instruction (Optional)
370J	34870		Decal, Instruction (Optional)
379	631021		Inlet Needle, Seat & Clip Assy.
380	632090		Carburetor (Incl. 184) (Refer to Division 5, Section A, page A1-14 or Fiche 8A, Grid E-1 for breakdown)
390A	590531		Side Mount Rewind Starter (Refer to Division 5, Section C, page 32 or Fiche 8A, Grid G-3 for breakdown)
400	33740D		* Gasket Set (Incl. items marked *)
420	730225		SAE 30, 4-Cycle Engine Oil (Quart)
425	730571		Starter Muff Kit (Incl.370J,426,427)(Opt.)
426	32203		Starter Air Cleaner (Optional)
427	32204		Starter Air Cleaner Bracket (Optional)
436	611006		Stator Plate Ass'y.(Incl.377,378,437, 442-448)
437	30551		Spring, Breaker box cover
438	610947		Cover, Dust
439	610955		Gasket, Stator cover
440	30992		Cam, Breaker
442	610385		Washer
443	610408		Nut, 8-32
444	29181		Breaker Fastening Screw & Washer
445	610593		Condenser Fastening Screw
446	33356		Terminal, Ground

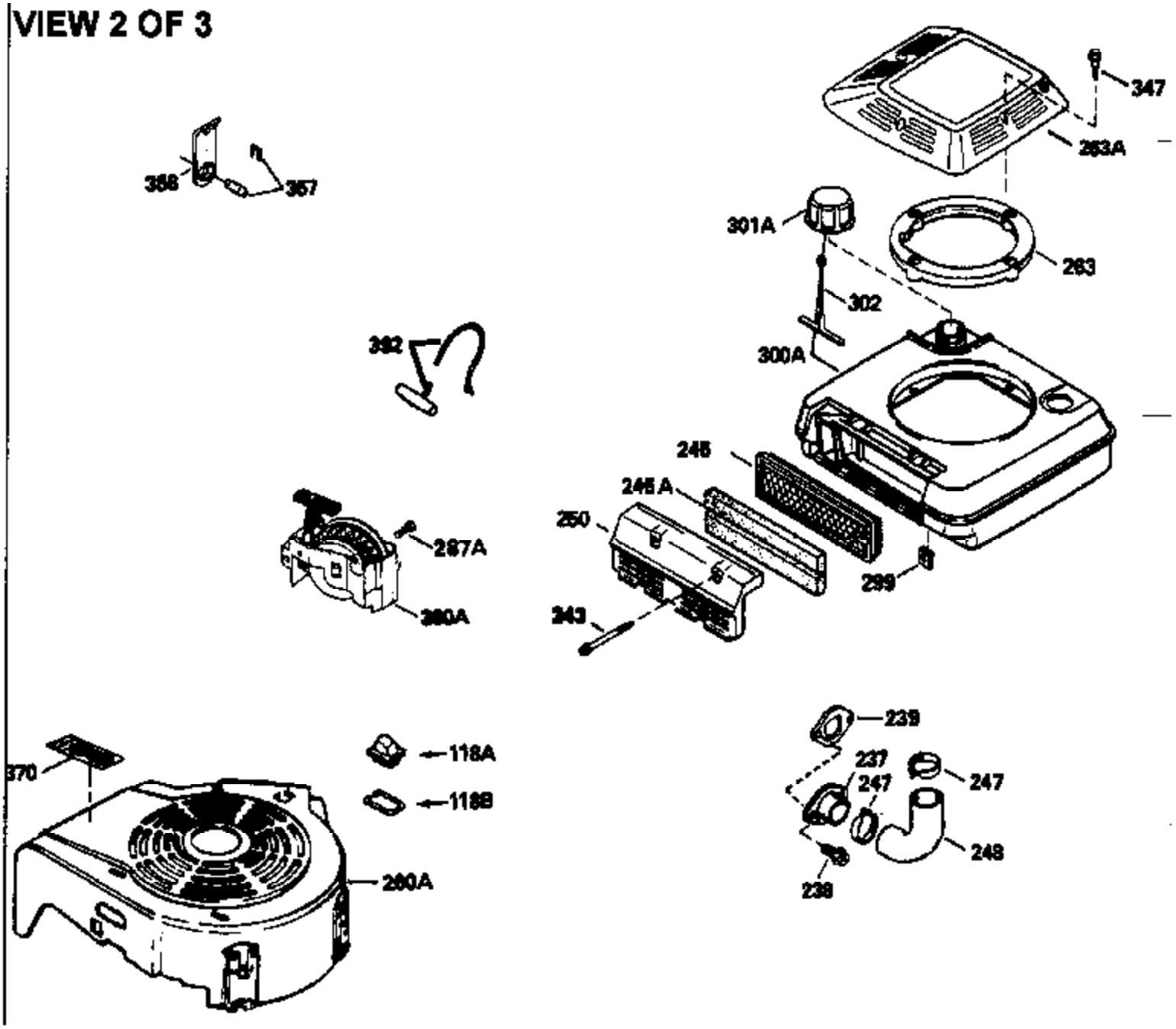
VIEW 2 OF 3
347
263A
358
357
301A
263
302
300A
392
245
245A
250
287A
299
243
239
237
247
247
248
238
118A
118B
370
260A

Ref #	Part Number	Qty	Description
32	32323		Washer, Thrust NOTE: This thrust washer maynot be required if a new crankshafthas been installed. Check the proper Mechanic's Handbook for acceptable end play. Use this .010" thrust washer if excess end play is measured.
118	730194		Rope Guide Kit (Use as required)
167	650688		Screw, 10-32 x 1" (Drilled thru)
168	32924		Spring, Speed adjusting screw
201	33150		Bracket, Over-ride
238	650806		Screw, 10-32 x 5/8"
239	34338		* Gasket, Air cleaner
246E	35435		Filter, Pre-air (Use as required)
246	34340		Element, Air cleaner
250	34341A		Cover, Air cleaner
287A	650735		Screw, 10-24 x 3/8" (Use as required)
287A			Pop Rivet (3/16" Dia.) (Purchase loca lly)
300A	34476		Fuel Tank (Incl. 292 & 301)
326	34113		Plug, Screen
370H	34387		Decal, Instruction (Optional)
370J	34870		Decal, Instruction (Optional)
390A	590531		Side Mount Rewind Starter (Refer to Division 5, Section C, page 32 or Fiche 8A, Grid G-3 for breakdown)
425	730571		Starter Muff Kit (Incl.370J,426,427)(Opt.)
426	32203		Starter Air Cleaner (Optional)
427	32204		Starter Air Cleaner Bracket (Optional)
436	611006		Stator Plate Ass'y.(Incl.377,378,437, 442-448)
437	30551		Spring, Breaker box cover
438	610947		Cover, Dust
439	610955		Gasket, Stator cover
440	30992		Cam, Breaker
442	610385		Washer
443	610408		Nut, 8-32
444	29181		Breaker Fastening Screw & Washer
445	610593		Condenser Fastening Screw
446	33356		Terminal, Ground

VIEW 3 OF 3

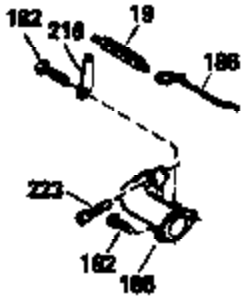
182
218
19
186
223
182
186

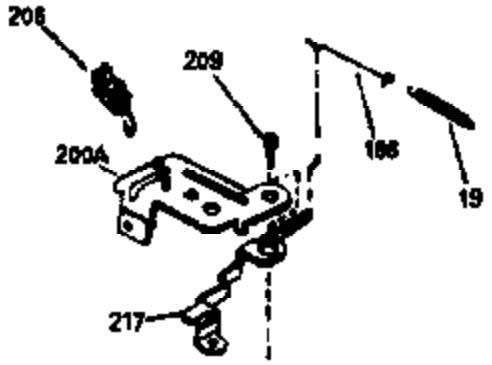
206
209
200A
186
19
217

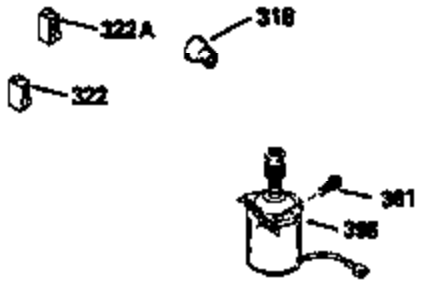
322A
318
322
361
396

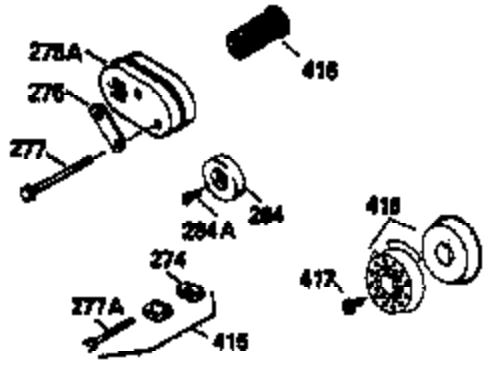
278A
276
277
416
284
284A
418
417
274
277A
415

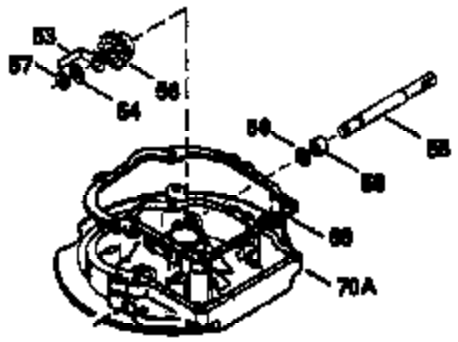
53
57
56
54
55
58
59
70A

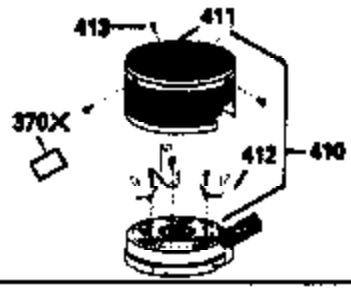
413
411
370X
412
410

57

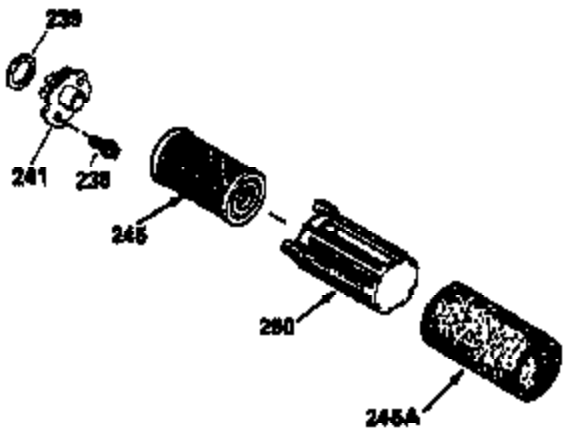
236
241
238
245
280
245A

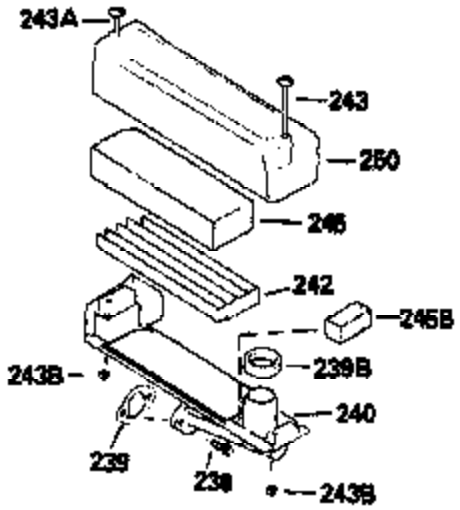
243A
243
250
246
242
245B
243B
239B
240
239
238
243B

Ref #	Part Number	Qty	Description
19	31386		Spring, Governor
32	32323		Washer, Thrust NOTE: This thrust washer maynot be required if a new crankshafthas been installed. Check the proper Mechanic's Handbook for acceptable end play. Use this .010" thrust washer if excess end play is measured.
69	35261		* Gasket, Mounting flange
118	730194		Rope Guide Kit (Use as required)
167	650688		Screw, 10-32 x 1" (Drilled thru)
168	32924		Spring, Speed adjusting screw
182	6201		Screw, 1/4-28 x 7/8"
185	31384A		Pipe, Intake (Incl. 224)
186	34337		Link, Governor spring
201	33150		Bracket, Over-ride
206	610973		Terminal (Use as required)
209	30200		Screw, 10-24 x 9/16"
223	650451		Screw, 1/4-20 x 1"
238	650806		Screw, 10-32 x 5/8"
239	34338		* Gasket, Air cleaner
240	34339		Body, Air cleaner
246	34340		Element, Air cleaner
246E	35435		Filter, Pre-air (Use as required)
250	34341A		Cover, Air cleaner
274	26754A		* Gasket, Exhaust (Use as required)
275A	35603		Muffler (Incl. 277)
277	650795		Screw, 1/4-20 x 2-1/4" (Use as requir ed)
277	650774		Screw, 1/4-20 x 2-3/8" (Use as requir ed)
277	792005		Screw, 1/4-20 x 2-1/2" (Use as requir ed)
277A	30063		Screw, Torx T-30, 1/4-20 x 1/2" (Use as req.)
284	34422		Deflector, Exhaust
284A	650760		Screw, 8-32 x 3/8"
326	34113		Plug, Screen
370H	34387		Decal, Instruction (Optional)
370J	34870		Decal, Instruction (Optional)
390A	590531		Side Mount Rewind Starter (Refer to Division 5, Section C, page 32 or Fiche 8A, Grid G-3 for breakdown)
410	730574		Debris Screen Kit(Incl.370H,411-413)(Opt.)
411	35596		Screen, Debris (Optional)
412	35597		Bracket, Debris screen (Optional)
413	650910		Screw, 8-32 x 1/4 (Optional)
415	730162		Muffler Adapter Kit(Incl.274,277)(Use as req)
425	730571		Starter Muff Kit (Incl.370J,426,427)(Opt.)
426	32203		Starter Air Cleaner (Optional)
427	32204		Starter Air Cleaner Bracket (Optional)
436	611006		Stator Plate Ass'y.(Incl.377,378,437, 442-448)
437	30551		Spring, Breaker box cover
438	610947		Cover, Dust
439	610955		Gasket, Stator cover
440	30992		Cam, Breaker
442	610385		Washer
443	610408		Nut, 8-32
444	29181		Breaker Fastening Screw & Washer
445	610593		Condenser Fastening Screw
446	33356		Terminal, Ground