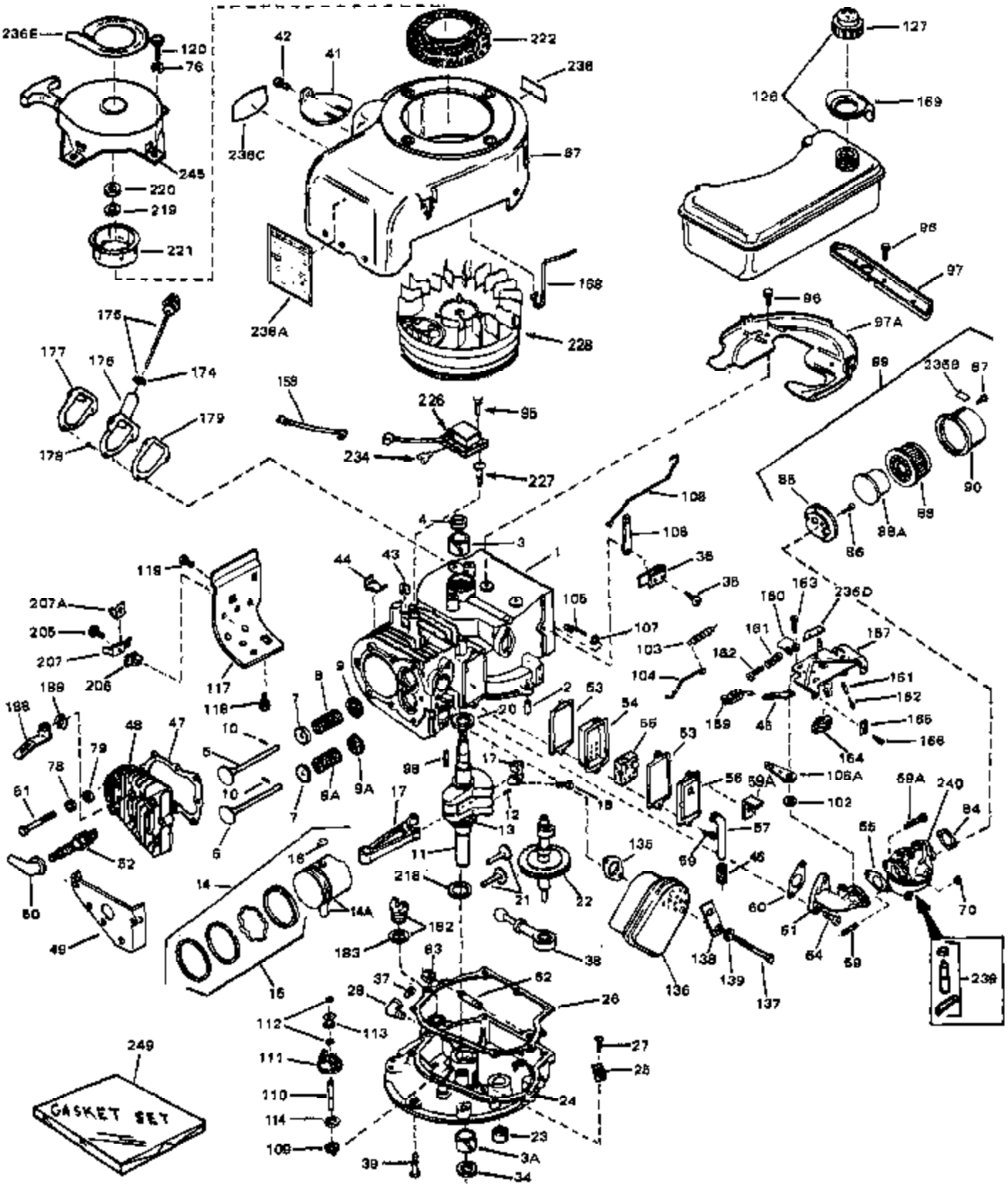
GASKET SET

Ref #	Part Number	Qty	Description
1	34172A	0	Cylinder Assy. (2-3/4" Bore)
2	27652	0	Pin, Dowel
3A	31462	0	Bushing, Crankshaft
3	31461	0	Bushing, Crankshaft
4	32630	0	Seal, Oil
5	32783	0	Valve, Intake (Standard)
5	32784	0	Valve, Intake (1/32" oversize)
6	27878A	0	Valve, Intake (Standard)
6	27880A	0	Valve, Intake (1/32" oversize)
7	27882	0	Cap, Upper valve spring
8A	27881	0	Spring, Valve
8	27881	0	Spring, Valve
9A	32581	0	Cap, Lower valve spring
9	32581	0	Cap, Lower valve spring
10	20810	0	Pin, Valve spring retaining
11	32687A	0	Crankshaft Assy.
12	29783	0	Pin, Crankshaft gear
13	27884	0	Gear, Crankshaft
14	34517	0	Piston, Pin & Ring Assy. (Std.)
14	34518	0	Piston, Pin & Ring Assy. (.010 oversize)
14	34519	0	Piston, Pin & Ring Assy. (.020 oversize)
14A	32592B	0	Piston & Pin Assy. (Std.) (2-3/4")
14A	32593B	0	Piston & Pin Assy. (.010 oversize)
14A	32594B	0	Piston & Pin Assy. (.020 oversize)
15	32595	0	Ring Set, Piston (Std.) (2-3/4")
15	32596	0	Ring Set, Piston (.010 oversize)
15	32597	0	Ring Set, Piston (.020 oversize)
16	27888	0	Ring, Piston pin retaining
17	32591C	0	Rod Assy., Connecting
18	650662C	0	Screw, Connecting rod (Two pieces)
20	650625	0	Washer, Thrust
21	34034	0	Lifter, Valve
22	32114	0	Camshaft (Mech. Compression Release)
24	31471C	0	Flange, Mounting
25	31355	0	Screen, Oil filter
26	30684	0	Gasket, Mounting flange
27	29117	0	Screw
34	27897	0	Seal, Oil
35	650548	0	Screw, Hex washer hd., 8-32 x 5/16
36	31335	0	Clamp, Governor lever
37	27642	0	Plug, Drain
38	31356	0	Pump Assy., Oil
39	650488	0	Screw
43	27275	0	Clip, Hi-tension wire
44	29443	0	Clip, Fuel line
45	32704	0	Clip, Fuel line
47	32631	0	Gasket, Cylinder head
48	30938A	0	Head, Cylinder
49	30939A	0	Cover, Cylinder head
50	27276	0	Cover, Spark plug
50	610118	0	Cover, Spark plug
51	650697A	0	Screw, Hex flange hd., 5/16-18 x 2-1/2
52	33636	0	Plug, Spark (Champion J-8 or equivalent)
52	34251	0	Resistor Spark Plug
53	27896	0	Gasket, Breather cover
54	28423	0	Body, Breather
55	28424	0	Element, Breather
56	28425	0	Cover, Valve chamber

Ref #	Part Number	Qty	Description
57	27627	0	Tube, Breather
59	650128	0	Screw
60	27915	0	Gasket, Intake pipe
61	32632	0	Pipe, Intake
64	650378	0	Screw
65	26756	0	Gasket, Carburetor
67	32223A	0	Housing, Blower (5.56 Dia. starter mtg. bolt
69	32633	0	Stud, Intake pipe
69A	650372	0	Screw, Hex hd. Sems, 1/4-20 x 13/16
70	29752	0	Nut
76	27261	0	Washer, Flat
76	650168	0	Washer, Flat
78	650690	0	Washer, Belleville
79	650691	0	Washer, Flat
84	27272	0	Gasket, Air cleaner
85	31691	0	Bracket, Air cleaner
86	28820	0	Screw
87	650152	0	Screw
88	30727	0	Element, Air cleaner
89	730127	0	Cleaner Assy., Air (Poly)
89	730164	0	Cleaner Assy., Air (Paper)
90	31715	0	Body, Air cleaner
95	650489	0	Screw
95	650516	0	Screw
96	650561	0	Screw
97A	29536	0	Baffle, Blower housing
97A	35256A	0	Baffle, Blower housing (With electric
98	32589	0	Key, Flywheel
103	31361	0	Spring, Governor
104	32582	0	Link, Governor spring
105	30669	0	Rod, Governor
106	31357	0	Lever, Governor
107	28277	0	Washer, Flat
108	31823	0	Link, Throttle
109	31707A	0	Spacer Assy., Governor
110	30668	0	Shaft, Mechanical governor
111	30591	0	Gear Assy., Governor
112	29193	0	Ring, Retaining
113	30588A	0	Spool, Governor
117	30622A	0	Extension, Blower housing
118	650128	0	Screw
119	30063	0	Screw
119	30688	0	Screw, Hex hd. Sems, 1/4-20 x 1/2
120	29716	0	Screw
127	33032	0	Cap, Fuel filler (Red Plastic) (Spurt
127	34118	0	Cap, Fuel filler (Red Plastic) (Spurt
127	34210	0	Cap, Fuel filler (Red Plastic) (Spurt
127	410144B	0	Cap, Fuel filler (White Plastic) (Std.)
135	27930	0	Gasket, Exhaust
139	8274	0	Lockwasher
158	35349	0	Wire Assy., Ground (Female fittings both
159	610973	0	Terminal Assy.
161	31342	0	Spring, Compression
162	650549	0	Screw
163	30200	0	Screw
164	32410	0	Knob, Speed control
165	27793	0	Clip, Conduit
166	28942	0	Screw

Ref #	Part Number	Qty	Description
167	32181A	0	Control Assy., Speed
182	28607	0	Indicator, Oil level
183	29673	0	Gasket, Filler plug
219	650815	0	Washer, Belleville
220	8116	0	Nut
221	32125	0	Cup, Starter
222	590417	0	Screen, Starter cup
236A	550223	0	Decal, Name
236B	31752	0	Decal, Air cleaner
236	34346	0	Decal, Instruction
239	631021	0	Inlet Needle, Seat & Clip Assy.
240	631447	0	Carburetor
245	590427	0	Starter, Rewind
249	33239	0	Gasket Set

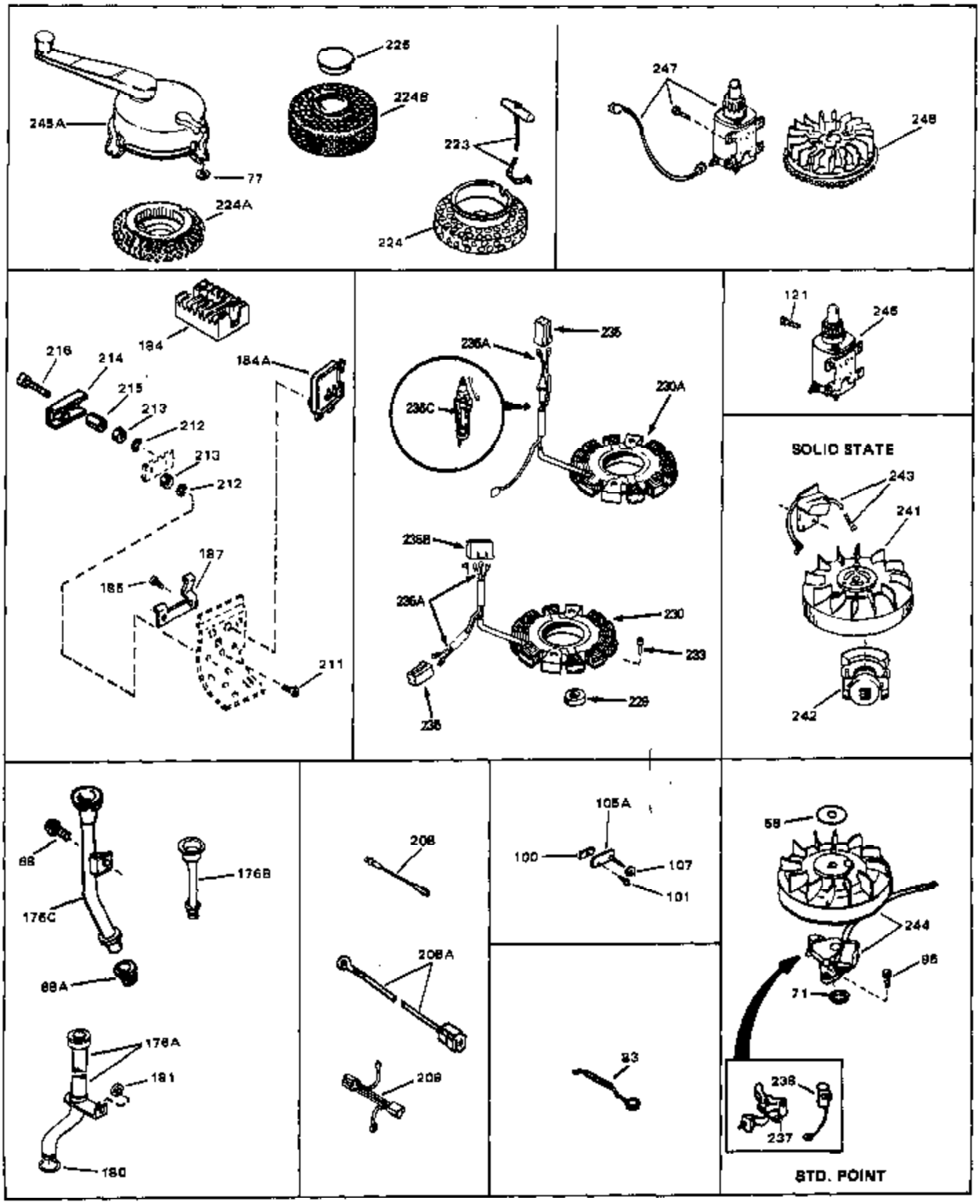
225
224B
245A
77
223
224A
224
247
248
184
216
214
184A
215
213
212
213
212
187
185
211
235
236A
236C
230A
236B
236A
230
233
229
236
121
246
SOLID STATE
243
241
242
68
176B
176C
68A
176A
181
180
208
208A
209
105A
100
107
101
83
58
244
96
71
238
237
STD. POINT

Ref #	Part Number	Qty	Description
77	27656	0	Washer, Flat
95	650489	0	Screw
95	650516	0	Screw
107	28277	0	Washer, Flat
121	30063	0	Screw
121	30688	0	Screw, Hex hd. Sems, 1/4-20 x 1/2
209	33018	0	Harness, Adapter
237	30547A	0	Contact Assy., Breaker
238	30548B	0	Condenser
244	610689A	0	Magneto, Tecumseh
247	32386	0	Starter Motor Kit (110-120 Volt)
247	32901	0	Starter Motor Kit (110-120 Volt)
247	33328	0	Starter Motor Kit (110-120 Volt)
247	33328A	0	Starter Motor Kit (110-120 Volt)
247	33328B	0	Starter Motor Kit (110-120 Volt)
247	33328C	0	Starter Motor Kit (110-120 Volt)
247	33518	0	Starter Motor Kit (110-120 Volt)
247	33518A	0	Starter Motor Kit (110-120 Volt)
247	33518B	0	Starter Motor Kit (110-120 Volt)
247	33518B	0	Starter Motor Kit (110-120 Volt)
248	30811A	0	Flywheel
248	611042	0	Flywheel (Std. Point) (V70 type letter D)
248	611085	0	Flywheel (Solid state ignition)

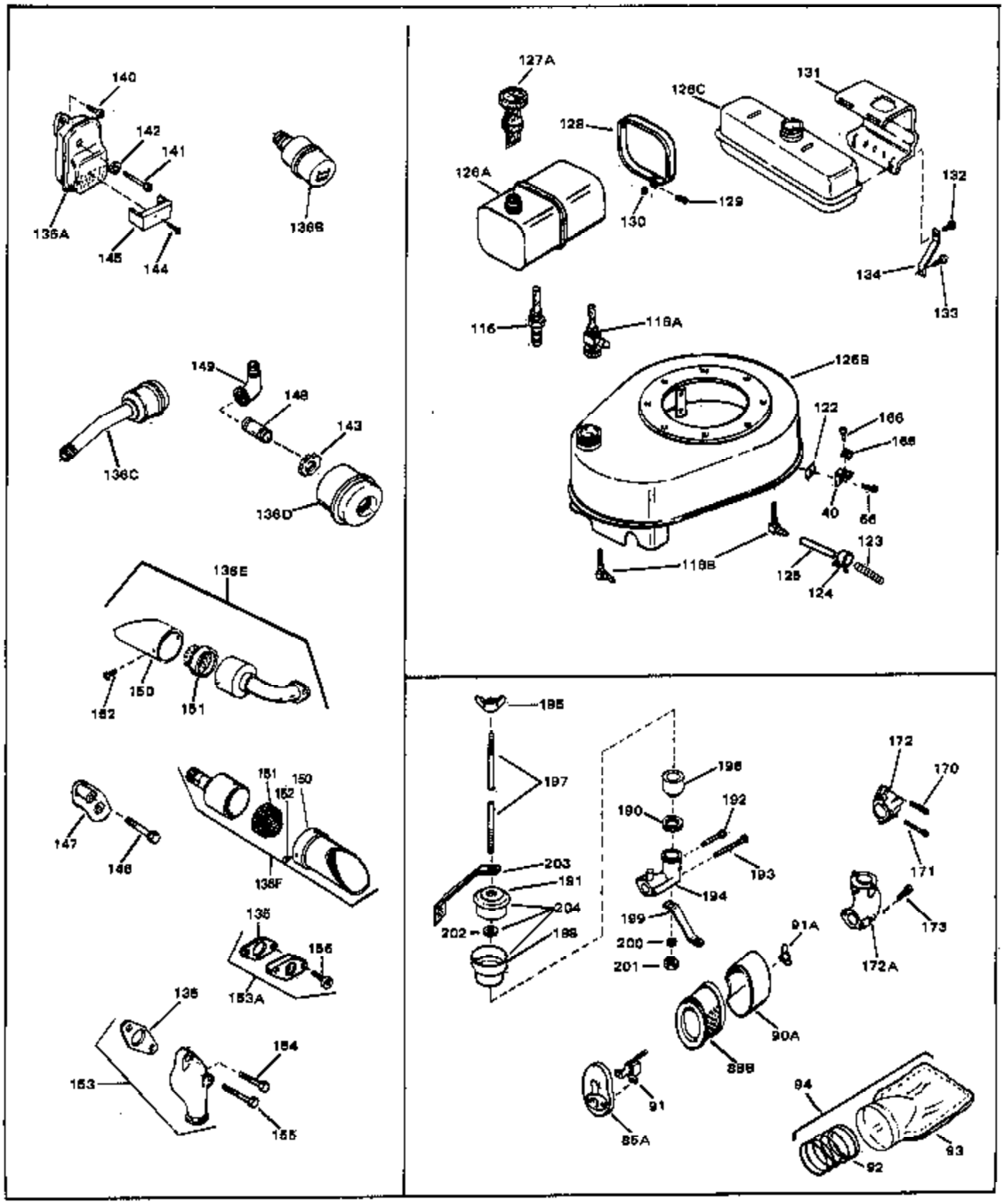
140
142
141
136A
145
144
136B
149
148
143
136C
136D
136E
150
152
151
151
150
152
147
146
136F
135
156
153A
135
154
153
155
127A
126C
131
128
126A
129
130
132
134
133
116
116A
126B
122
166
165
40
66
123
118B
125
124
195
197
196
192
190
203
191
193
194
204
199
202
198
200
201
91A
172
170
171
173
172A
90A
88B
91
85A
94
93
92

Ref #	Part Number	Qty	Description
66	29747B	0	Screw, Phil. Hex hd. Sems, 5/16-24 x 21/32
124	26460	0	Clamp, Fuel line
125	29774	0	Line, Fuel (Braided 8.25")
125	30705	0	Line, Fuel (Braided 16")
125	30962	0	Line, Fuel (Braided 32")
135	27930	0	Gasket, Exhaust
136F	391026	0	Muffler
136A	32401	0	Muffler
140	30196	0	Screw
141	650694A	0	Screw, Hex flange hd., 5/16-18 x 2
142	26073	0	Washer, Connecting rod bolt
144	650665	0	Screw
145	32429	0	Deflector, Exhaust
153A	730130	0	Muffler Adapter Kit
153	31288	0	Muffler Adapter Kit
154	6021A	0	Screw, Hex flange hd., 5/16-18 x 1-1/2
155	650697A	0	Screw, Hex flange hd., 5/16-18 x 2-1/2
156	30196	0	Screw
165	27793	0	Clip, Conduit
166	28942	0	Screw